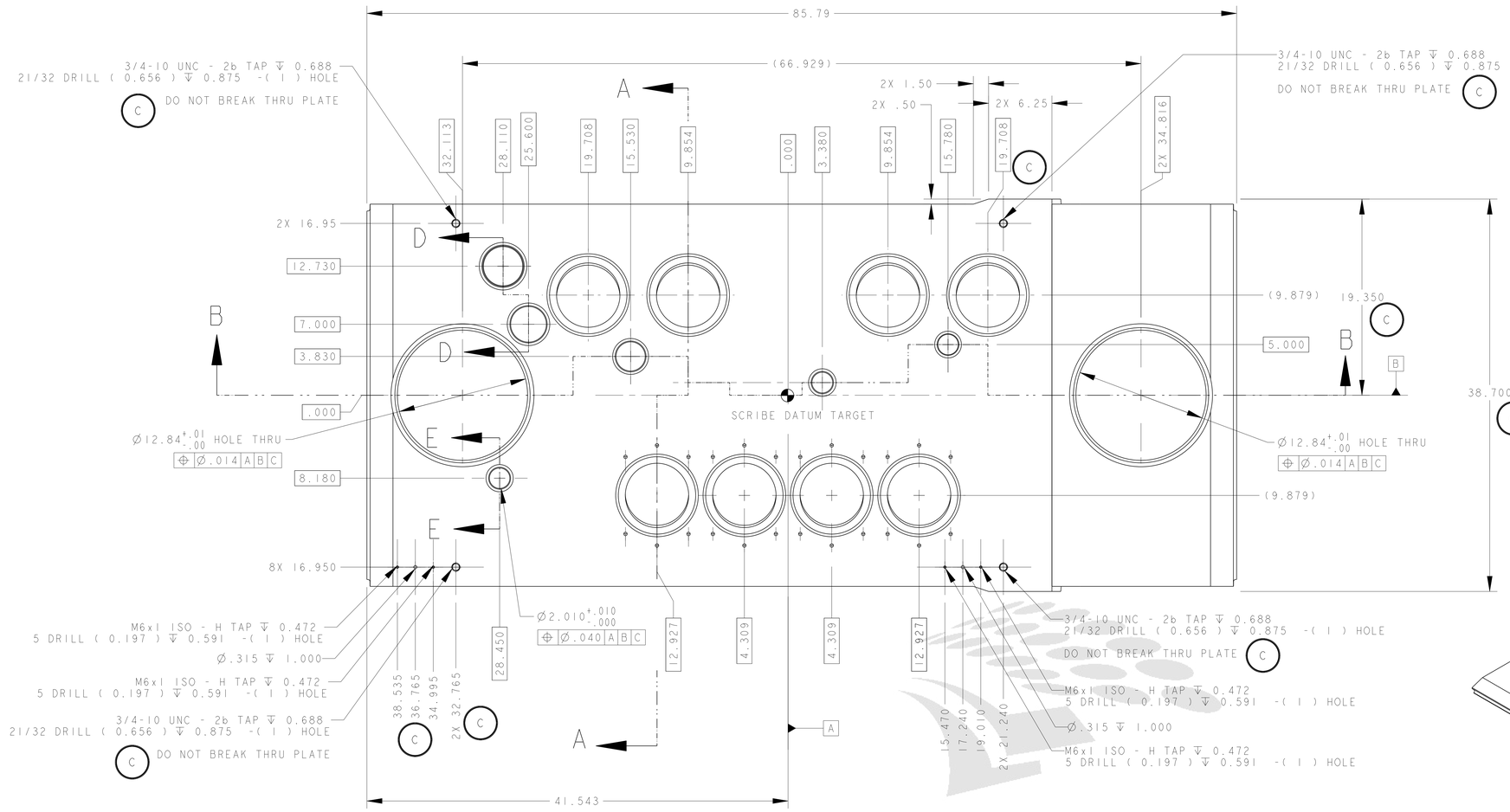

NOTES: UNLESS OTHERWISE SPECIFIED,

1. BLANCHARD GRIND PLATE, DATUM -C- SIDE BEFORE MACHINING MINIMUM CLEANUP.
2. DIMENSIONS AND TOLERANCING PER ANSI Y14.5M-1982 UNITS ARE IN INCHES UNLESS OTHERWISE SPECIFIED.
3. USE OF SULFUR OR SILICONE BEARING OILS, LUBRICANTS, OR COOLANTS ARE STRICTLY PROHIBITED
4. USE OF RESIN OR RUBBER BONDED ADRASIVES UNDER POWER IS STRICTLY PROHIBITED. USE VITREOUS BONDED ABRASIVES ONLY.
5. CLEANING SPECIFICATIONS FOR PARTS AND WELDMENTS TO BE PROVIDED BY VENDOR AND APPROVED BY LBNL.
6. PROTECT FINISHED PART BY BAGGING OR SIMILAR METHOD TO PROTECT AND MAINTAIN CLEANLINESS DURING SHIPMENT AND STORAGE.
7. VENDOR PROPOSED WELD PREPS MODIFICATIONS SUBJECT TO LBNL APPROVAL.
8. STRESS RELIEVE PART AFTER BENDING, PRIOR TO FINISH MACHINING.
9. ESTIMATED WEIGHT = 1,096 LBS

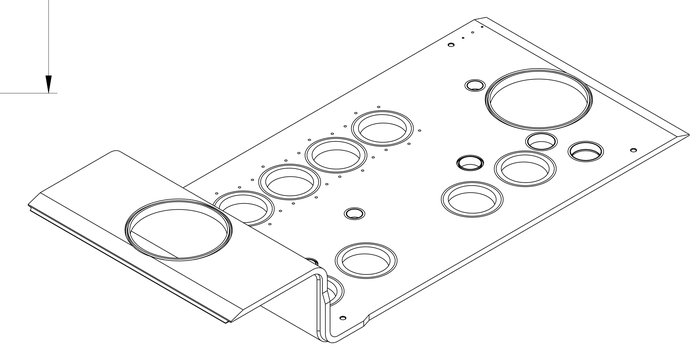

SCALE 13/100

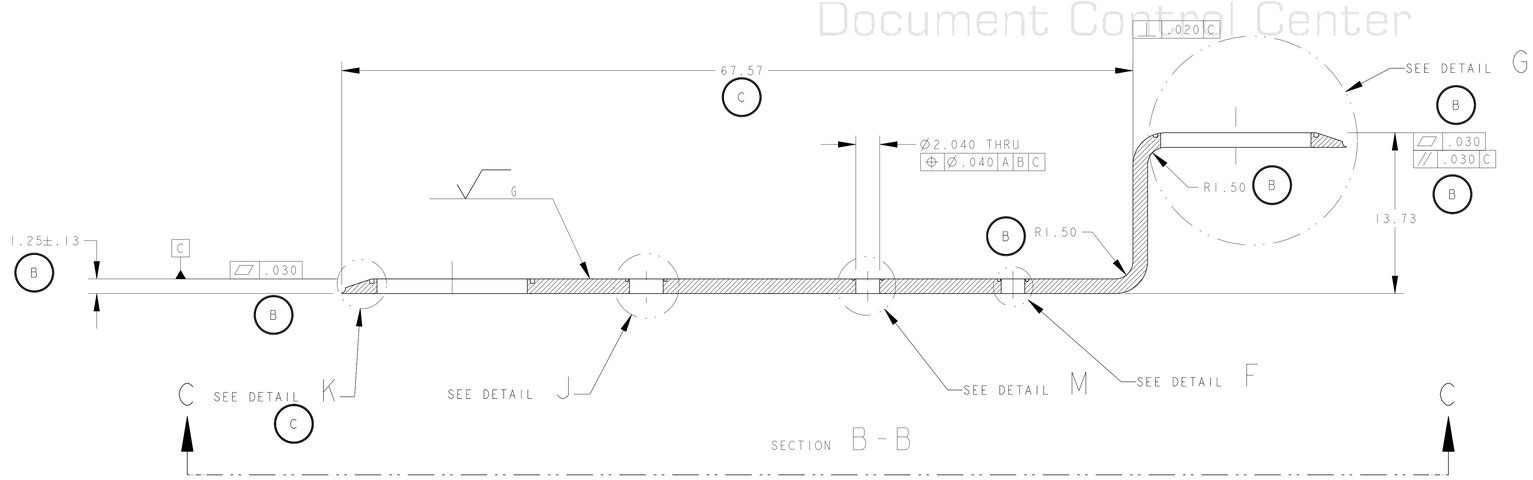

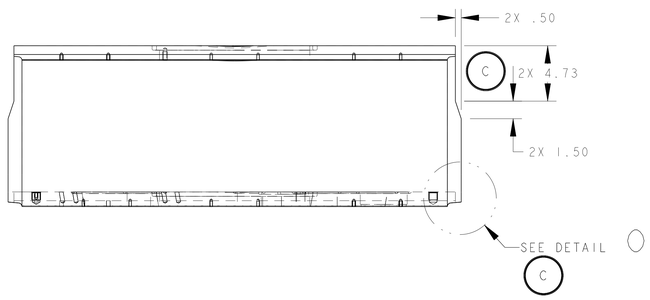

REV	DWG	CHK	ZONE	DATE	CHANGES
C	RLM	JPZ		8/20/03	ROTATED AND MOVED HOLES FOR TOOLING BALL ADDED WELD PREP CUTS AND CHAMFERS .XXX TOL WAS .XX; ADDED DIM 67.57 DELETED VIEW L; ADDED VIEW O ISO VIEW WAS 9/100 SCALE LIFTING FIXTURE HOLE LOC WAS 34.76 ADDED "DO NOT BREAK THRU" NOTE
B	JDR	DPO		02/19/03	- INCREASED BEND RADIUS FROM 1.00, - INCREASED THICKNESS TOL. FROM 1.25 +/- .03, - ADDED TRUE PRODUCTION TOL. TO HOLES (SHEET 2), - INCREASED FLATNESS TOLERANCE FROM .010, - INCREASED PARALLELISM FROM .020,
A	JDR	DPO		10/08/02	INITIAL RELEASE

THIRD ANGLE PROJECTION

DESCRIPTION	MATERIAL	MAT. LOCATION
PLATE,HOT ROLLED, ANNEALED, PICKLED PER ASTM A-240	304L SS	-

UNLESS OTHERWISE SPECIFIED
TOLERANCES
X.X ± 0.1 — FRAC. ± 1/64
X.XX ± 0.03 — Angles ± 1.00°
X.XXX ± 0.010 — FINISH 125 √(Ra)
DO NOT SCALE PRINT
THREADS ARE CLASS 2
CHAMFER ENDS OF ALL SCREW THREADS 30°
CUT ROUND, 1.5 THREAD RELIEF ON MACHINED THREADS
BREAK EDGES .016 MAX. ON MACHINED WORK
REMOVE BURRS, WELD SPLATTER & LOOSE SCALE
IN ACCORDANCE WITH ASME Y14.5M & B46.1

SHOP ORDERS
ACCT NO. — NO. REQD
DEL TO
SURFACE TREATMENT -
IDENT METHOD TAG
PROJECT NUMBER N/A
PROJECT NAME N/A
DWN BY KNOLLS — DATE 22-Aug-01
CHK BY JON ZBASNIK — DATE 04-APR-02
APR BY JON ZBASNIK — DATE 04-APR-02
SEW NO. -
ISSD DATE -
REQD DATE -

ERNEST ORLANDO LAWRENCE BERKELEY NATIONAL LABORATORY
UNIVERSITY OF CALIFORNIA - BERKELEY

LHC IR FEEDBOX
VACUUM
TOP PLATE DFBX E, IP5 LEFT

MICROFILMED: | DWG. TYPE: PART | SHOWN ON: 25i149 | SCALE: 1/5 | DO NOT SCALE PRINTS
PATENT CLEAR: | DESIGN ACCT. NO.: Z5LCE2 | CATEGORY CODE: LH2002 | DWG. NO.: 2518766 | SIZE: C | REV.: C
SHEET 1 OF 3

LBNL
Document Control Center

Officially Released to the LBNL Document Control Center
Released: August 26th, 2003 DCC Auth Key: G0LZ79EZFX
Downloaded by: Daniel Pulsifer at April 09, 2007 10:57:44

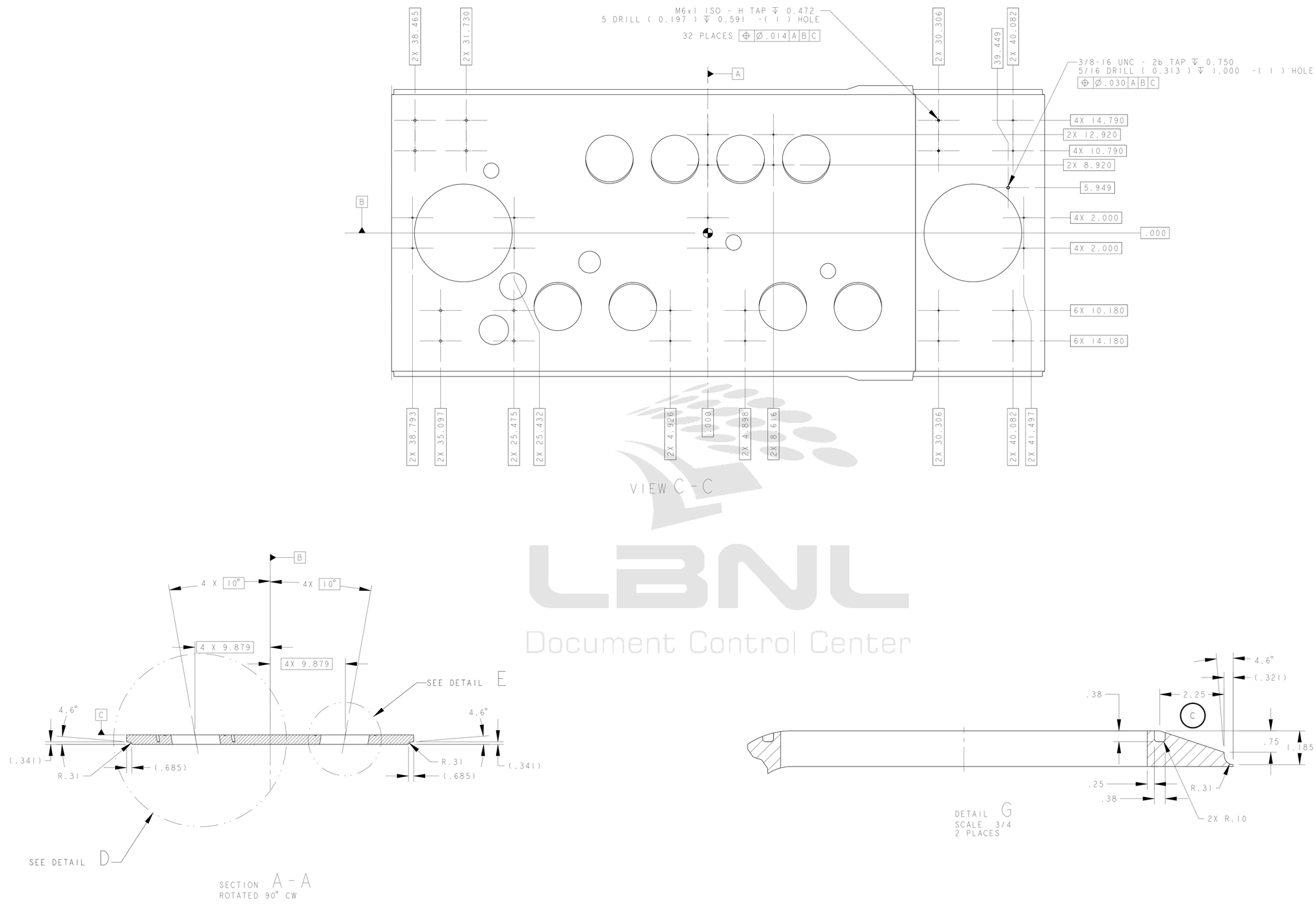

LBNL
Document Control Center

THIRD ANGLE PROJECTION

ERNEST ORLANDO LAWRENCE
BERKELEY NATIONAL LABORATORY
UNIVERSITY OF CALIFORNIA - BERKELEY

LHC IR FEEDBOX
VACUUM
TOP PLATE DFBX E, IP5 LEFT

MICROFILMED:	DWG. TYPE	SHOWN ON	SCALE: 1/5	DO NOT SCALE PRINTS
	PART	25i149	SHEET 2 OF 3	
PATENT CLEAR:	DESIGN ACCT. NO.	CATEGORY CODE	DWG. NO.	SIZE / REV.
	Z5LCE2	LH2002	2518766	C

DWG. NO. 2518766 SIZE C REV. 2

Officially Released to the LBNL Document Control Center
Released: August 26th, 2003 DCC Auth Key: G0LZ79EZFX
Downloaded by: Daniel Pulsifer at April 09, 2007 10:57:44

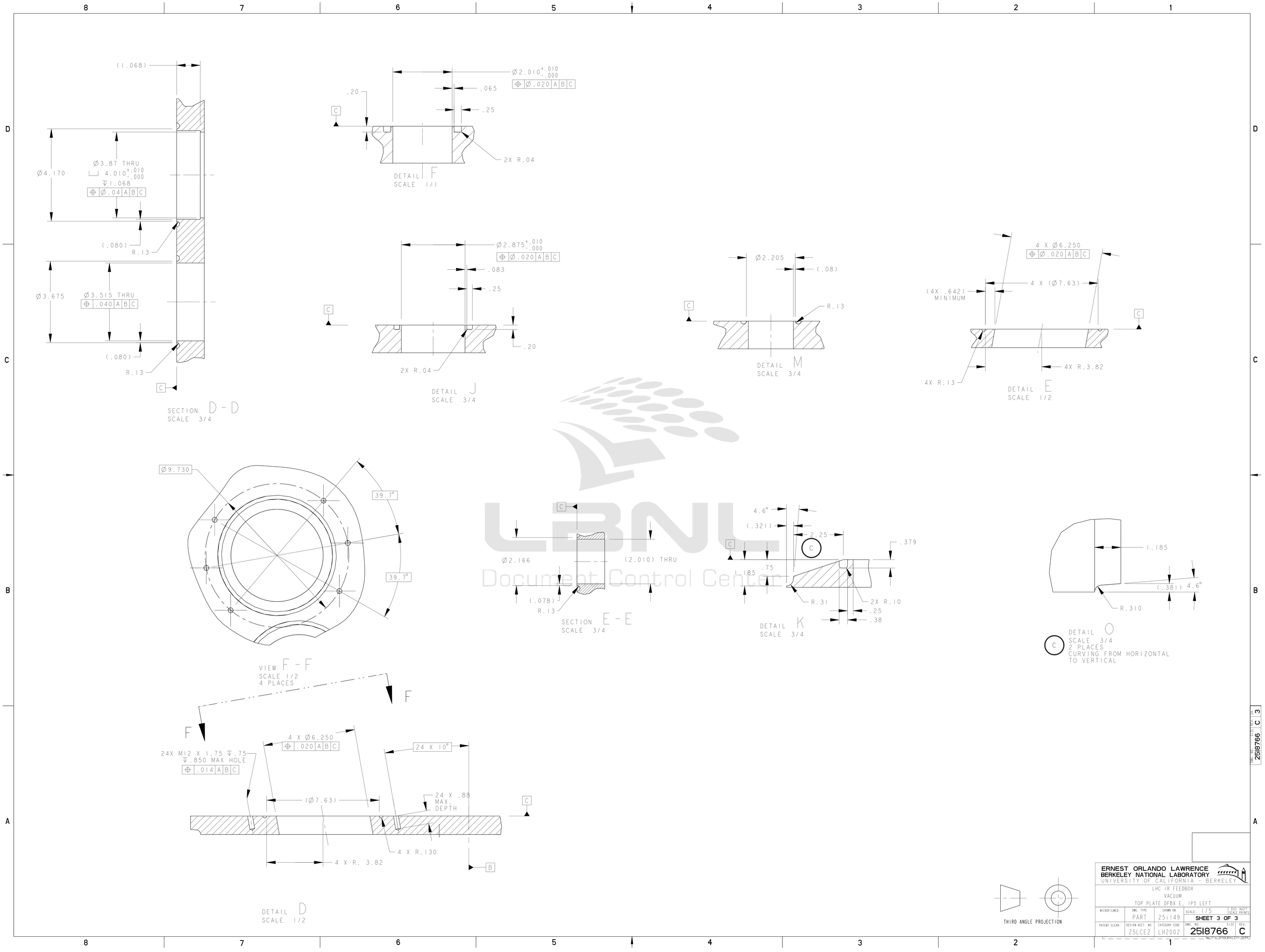

ERNEST ORLANDO LAWRENCE
BERKELEY NATIONAL LABORATORY
UNIVERSITY OF CALIFORNIA - BERKELEY

LHC IR FEEDBOX
VACUUM
TOP PLATE DFBX E, IP5 LEFT

MICROFILMED:	DWG. TYPE	SHOWN ON	SCALE: 1/5	DO NOT SCALE PRINTS
	PART	25i149	SHEET 3 OF 3	
PATENT CLEAR:	DESIGN ACCT. NO.	CATEGORY CODE	DWG. NO.	SIZE / REV.
	Z5LCE2	LH2002	2518766	C

DWG. NO. 2518766 SIZE C REV. 3

Officially Released to the LBNL Document Control Center
Released: August 26th, 2003 DCC Auth Key: G0LZ79EZFX
Downloaded by: Daniel Pulsifer at April 09, 2007 10:57:44