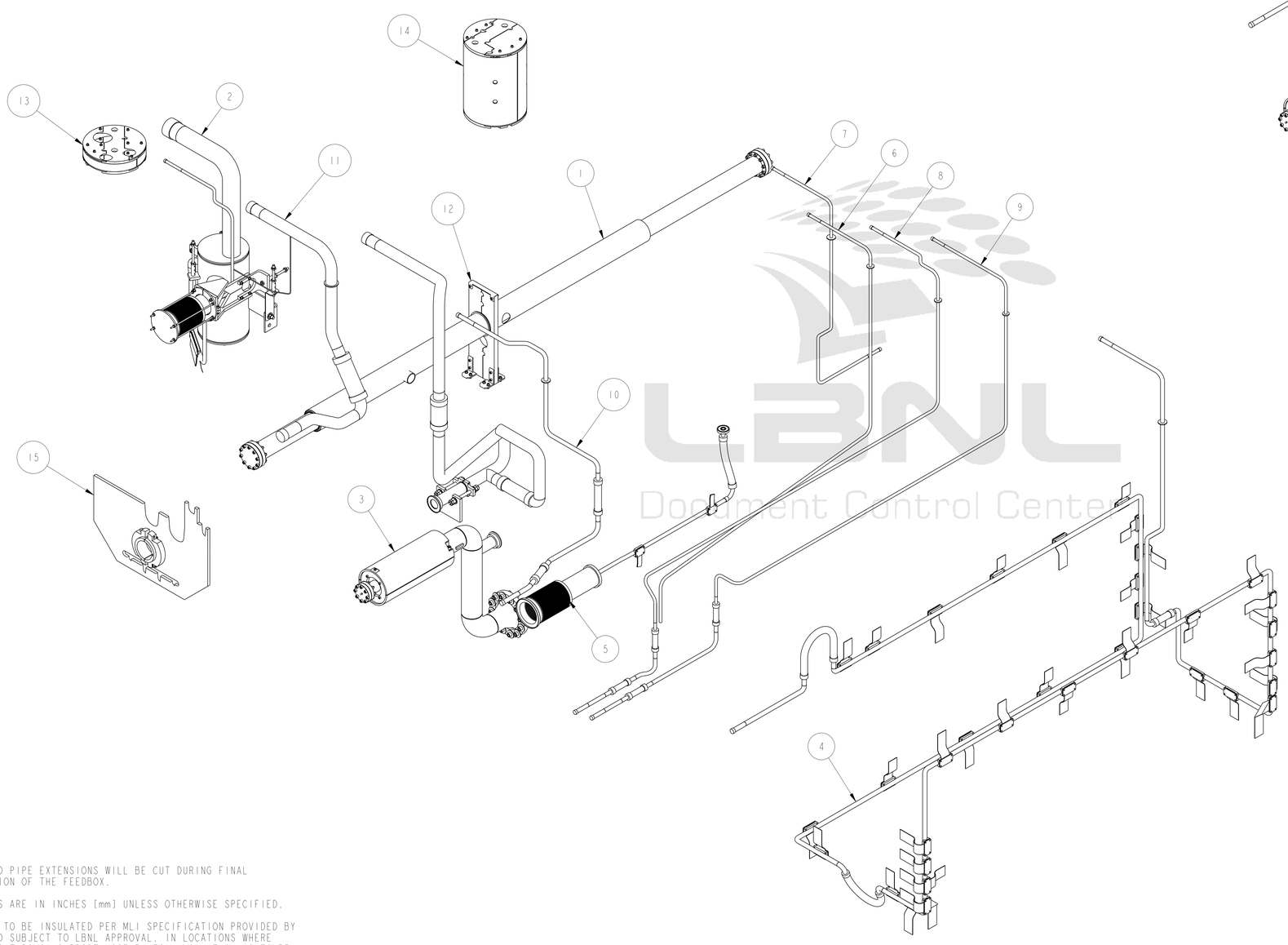

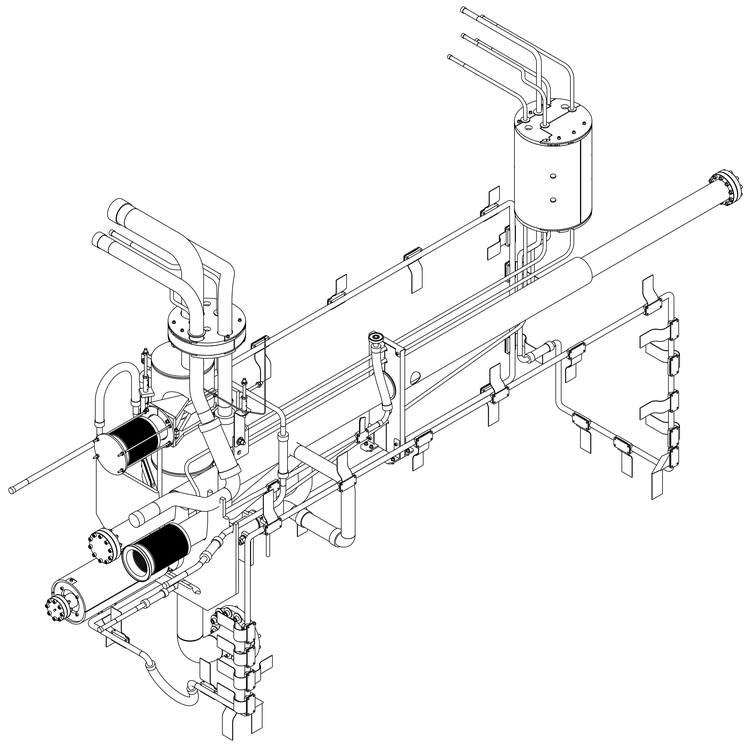

NOTES:

1. ALL CAPPED PIPE EXTENSIONS WILL BE CUT DURING FINAL INSTALLATION OF THE FEEDBOX.
2. DIMENSIONS ARE IN INCHES [mm] UNLESS OTHERWISE SPECIFIED.
3. ALL PIPES TO BE INSULATED PER MLI SPECIFICATION PROVIDED BY VENDOR AND SUBJECT TO LBNL APPROVAL. IN LOCATIONS WHERE PIPES PASS THROUGH SUPPORT ASSEMBLIES, INSULATION IS TO BE WRAPPED WITH KAPTON TAPE FOR PROTECTION FROM ABRASION DURING THERMAL CYCLING.

THIRD ANGLE PROJECTION

ITEM	PART NO	REQD	DESCRIPTION	MATERIAL
15	251412	1	SUPPORT, Q3 SIDE, DFBXA / DFBXF	NEMA G10
14	251202	1	SUPPORT, QQSB, DFBXF	NEMA G10
13	251201	1	SUPPORT, QQSA, DFBXF	NEMA G10
12	251623	1	SUPPORT, CENTER PIPE, DFBXF	-
11	251570	1	PIPE, LD2	-
10	251540	1	PIPE, E1	-
9	251531	1	PIPE, KD2	-
8	251529	1	PIPE, CC2	-
7	251528	1	PIPE, CC3	-
6	251519	1	PIPE, CC1	-
5	251301	1	PIPE, MQX2	-
4	251538	1	PIPE, EX	-
3	251554	1	PIPE WELDMENT, LD1 AND BUS DUCT	-
2	251545	1	PIPE, XB DFBXF	-
1	251510	1	V PIPE & JACKET ASSEMBLY	-

REV	DWG	CHK	ZONE	DATE	CHANGES
B	ARH	DPO		02/20/03	UPDATED SUBASSEMBLY VIEWS
A	MJK	DPO		11/25/02	INITIAL RELEASE

UNLESS OTHERWISE SPECIFIED

TOLERANCES		
	X.X ± 0.1	FRAC. ± 1/64
	X.XX ± 0.03	Angles ± 1.00°
	X.XXX ± 0.010	FINISH 125/

DO NOT SCALE PRINT

THREADS ARE CLASS 2
CHAMFER ENDS OF ALL SCREW THEADS 30°
CUT ROUND, 1.5 THREAD RELIEF ON MACHINED THREADS
BREAK EDGES .016 MAX. ON MACHINED WORK
REMOVE BURRS, WELD SPLATTER & LOOSE SCALE
IN ACCORDANCE WITH ASME Y14.5M & B46.1

SHOP ORDERS

ACCT NO.	NO. REQD	SER NO.	DATE ISSD
DEL TO		DATE REQD	
SURFACE TREATMT	-		
IDENT METHOD	TAG		
PROJECT NUMBER	N/A		
PROJECT NAME	N/A		
DWG BY	KNOLLS	DATE	27-Nov-02
CHK BY	D.OSHATZ	DATE	11/25/02
APR BY	D.OSHATZ	DATE	11/25/02

ERNEST ORLANDO LAWRENCE
BERKELEY NATIONAL LABORATORY
UNIVERSITY OF CALIFORNIA - BERKELEY

LHC IR FEEDBOX
CRYOGENICS
PIPING, DFBXF, IP5, RIGHT 24C395

MICROFILMED:	DWG. TYPE	SHOWN ON	SCALE: 0.125	DO NOT SCALE PRINTS
	ASSEM	.	SHEET 1 OF 11	
PATENT CLEAR:	DESIGN ACCT. NO.	CATEGORY CODE	DWG. NO.	SIZE / REV.
	Z5LCE2	LH2001	25i8746	B

DWG. NO. 25i8746 SIZE B REV. 1

Officially Released to the LBNL Document Control Center
Released: March 5th, 2003 DCC Auth Key: OLRCD3GK40
Downloaded by: Daniel Pulsifer at April 09, 2007 10:57:44

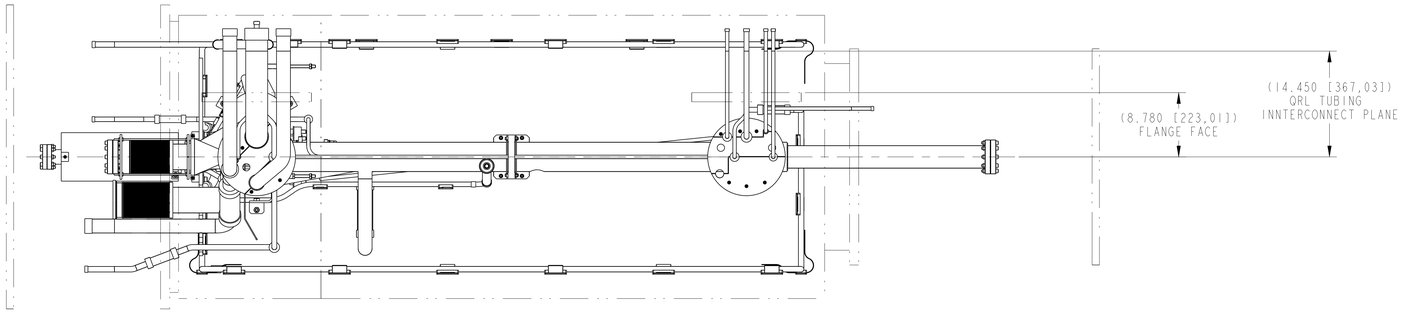

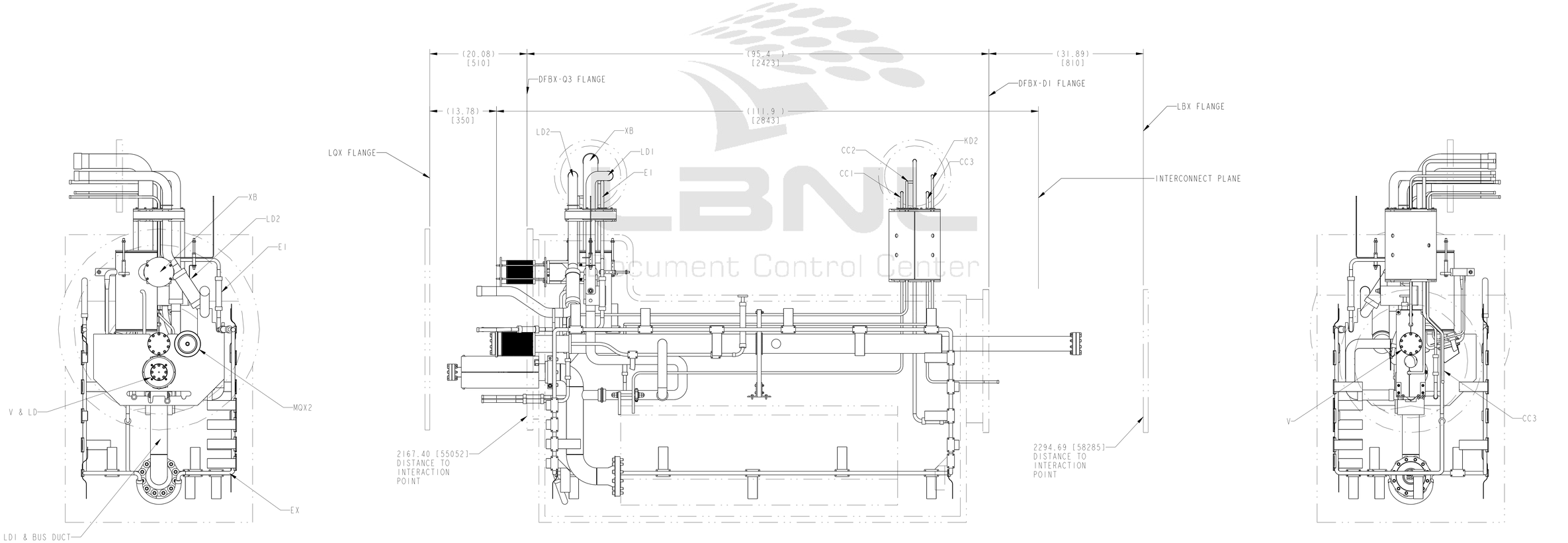

LBNL Document Control Center

ERNEST ORLANDO LAWRENCE BERKELEY NATIONAL LABORATORY UNIVERSITY OF CALIFORNIA - BERKELEY				
LHC IR FEEDBOX CRYOGENICS PIPING, DFBXF, IP5, RIGHT 24C395				
MICROFILMED:	DWG. TYPE ASSEM	SHOWN ON -	SCALE: 0.125	DO NOT SCALE PRINTS
			SHEET 2 OF 11	
PATENT CLEAR:	DESIGN ACCT. NO. Z5LCE2	CATEGORY CODE LH2001	DWG. NO. 25i8746	REV. B

DWG. NO. 25i8746 SHT REV 2 B

Officially Released to the LBNL Document Control Center
Released: March 5th, 2003 DCC Auth Key: OLRCD3GK40
Downloaded by: Daniel Pulsifer at April 09, 2007 10:57:44

INSTRUMENTATION LINES

SHOWN FOR REFERENCE ONLY
NOTE: ALL WELDS MUST LEAVE TUBE
INTERIOR BURR FREE

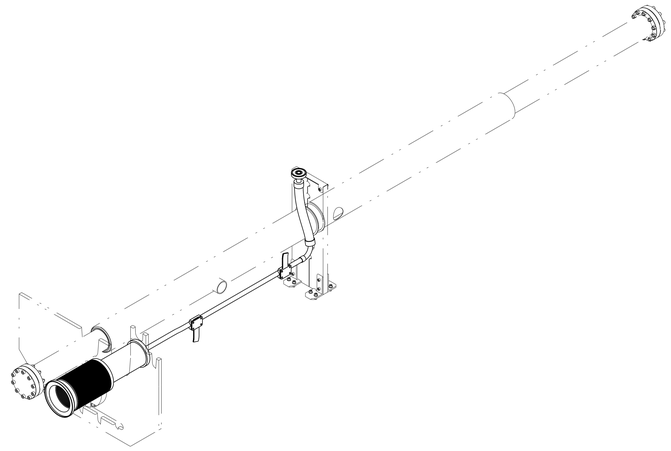

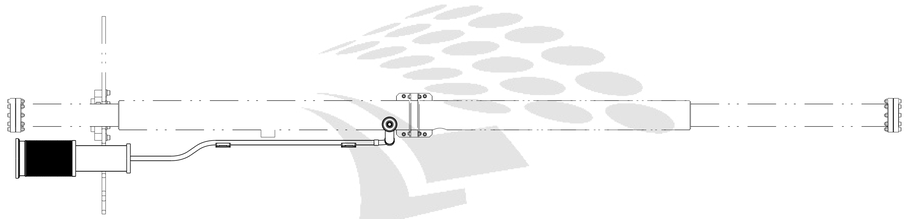

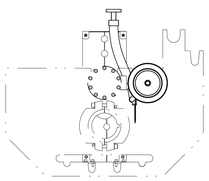

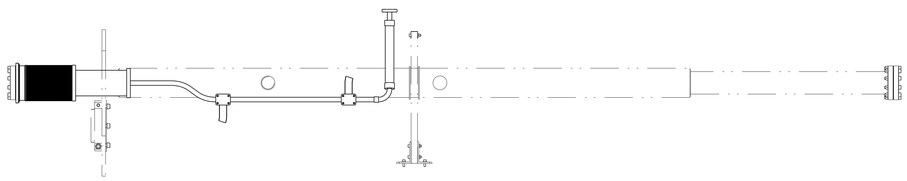

LBNL
Document Control Center

ERNEST ORLANDO LAWRENCE BERKELEY NATIONAL LABORATORY UNIVERSITY OF CALIFORNIA - BERKELEY					
LHC IR FEEDBOX CRYOGENICS PIPING, DFBXF, IP5, RIGHT 24C395					
MICROFILMED:	DWG. TYPE ASSEM	SHOWN ON	SCALE: 0.125	DO NOT SCALE PRINTS	
			SHEET 3 OF 11		
PATENT CLEAR:	DESIGN ACCT. NO. Z5LCE2	CATEGORY CODE LH2001	DWG. NO. 25i8746	SIZE B	REV.

DWG. NO. 25i8746 SHEET REV. 3 B

Officially Released to the LBNL Document Control Center
Released: March 5th, 2003 DCC Auth Key: OLRCD3GK40
Downloaded by: Daniel Pulsifer at April 09, 2007 10:57:44

LD LINES

SHOWN FOR REFERENCE ONLY

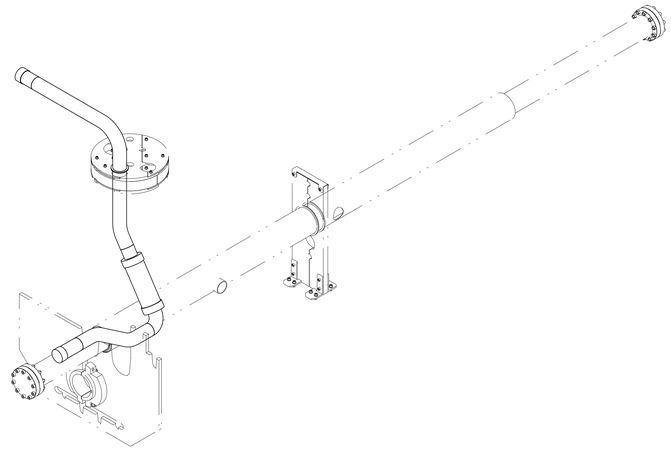

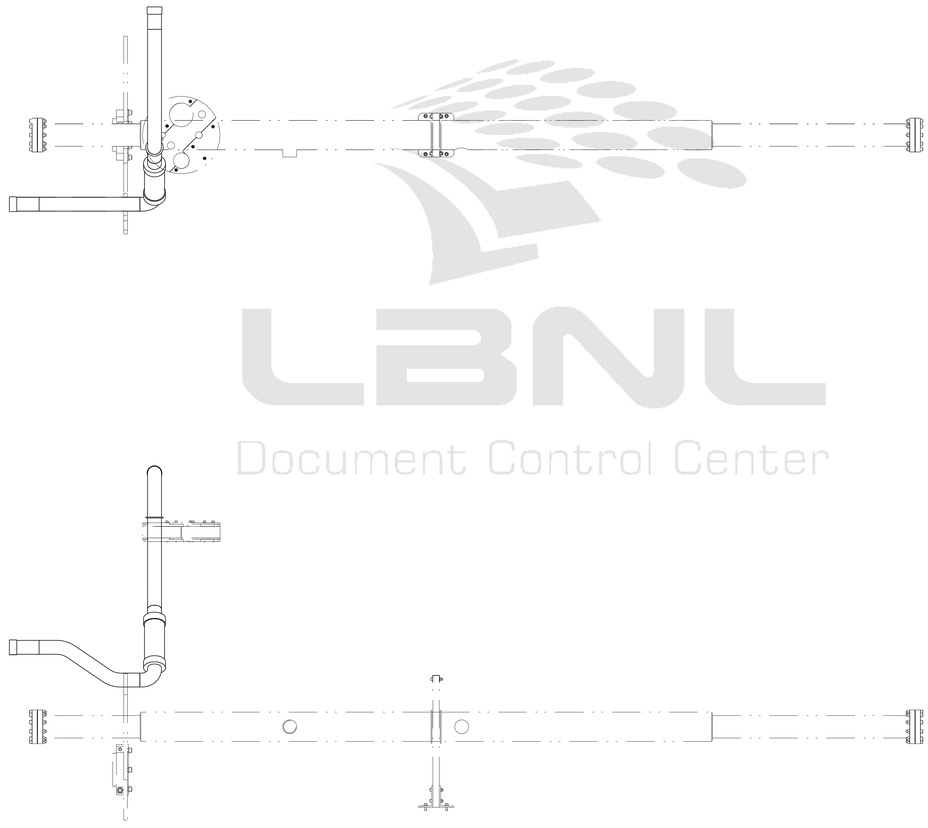

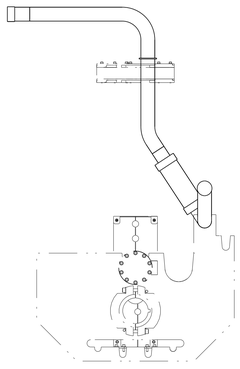

LBNL
Document Control Center

DWG. NO.	25i8746
LATEST REV.	B
SH.	4

ERNEST ORLANDO LAWRENCE
BERKELEY NATIONAL LABORATORY
UNIVERSITY OF CALIFORNIA - BERKELEY

LHC IR FEEDBOX
CRYOGENICS
PIPING, DFBXF, IP5, RIGHT 24C395

MICROFILMED:	DWG. TYPE: ASSEM	SHOWN ON: -	SCALE: 0.125	DO NOT SCALE PRINTS
			SHEET 4 OF 11	
PATENT CLEAR:	DESIGN ACCT. NO.: Z5LCE2	CATEGORY CODE: LH2001	DWG. NO.: 25i8746	SIZE: B / REV.: B

Officially Released to the LBNL Document Control Center
Released: March 5th, 2003 DCC Auth Key: OLRCD3GK40
Downloaded by: Daniel Pulsifer at April 09, 2007 10:57:44

CC LINES

SHOWN FOR REFERENCE ONLY

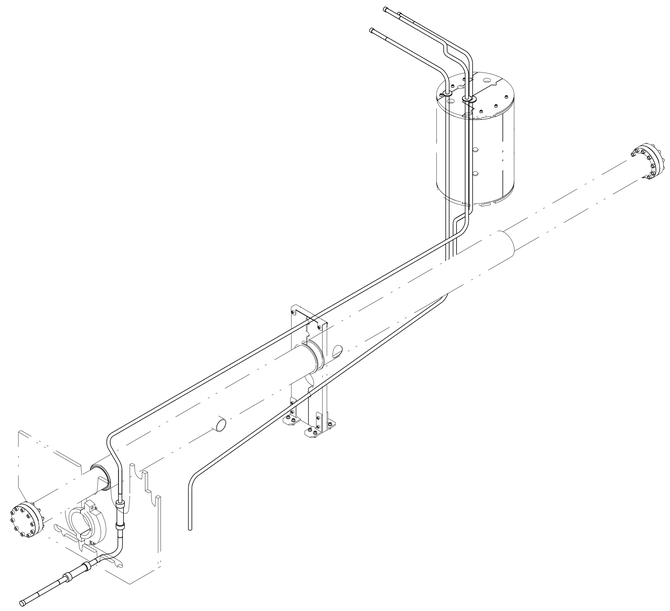

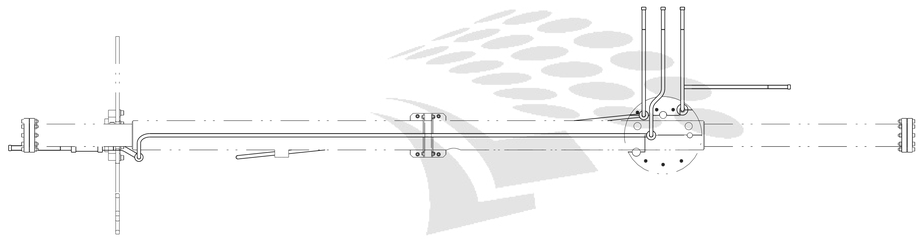

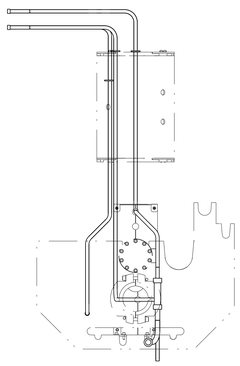

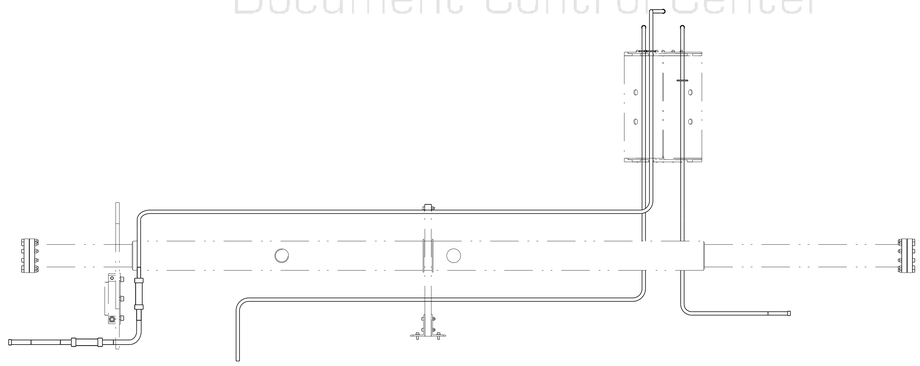

LBNL
Document Control Center

ERNEST ORLANDO LAWRENCE BERKELEY NATIONAL LABORATORY UNIVERSITY OF CALIFORNIA - BERKELEY			
LHC IR FEEDBOX CRYOGENICS PIPING, DFBXF, IP5, RIGHT 24C395			
MICROFILMED:	DWG. TYPE: ASSEM	SHOWN ON: -	SCALE: 0.125 DO NOT SCALE PRINTS SHEET 5 OF 11
PATENT CLEAR:	DESIGN ACCT. NO.: Z5LCE2	CATEGORY CODE: LH2001	DWG. NO.: 25i8746 SIZE: B REV.

DWG. NO. 25i8746 SHEET NO. 5 OF 11

Officially Released to the LBNL Document Control Center
Released: March 5th, 2003 DCC Auth Key: OLRCD3GK40
Downloaded by: Daniel Pulsifer at April 09, 2007 10:57:44

KD2 LINE

SHOWN FOR REFERENCE ONLY

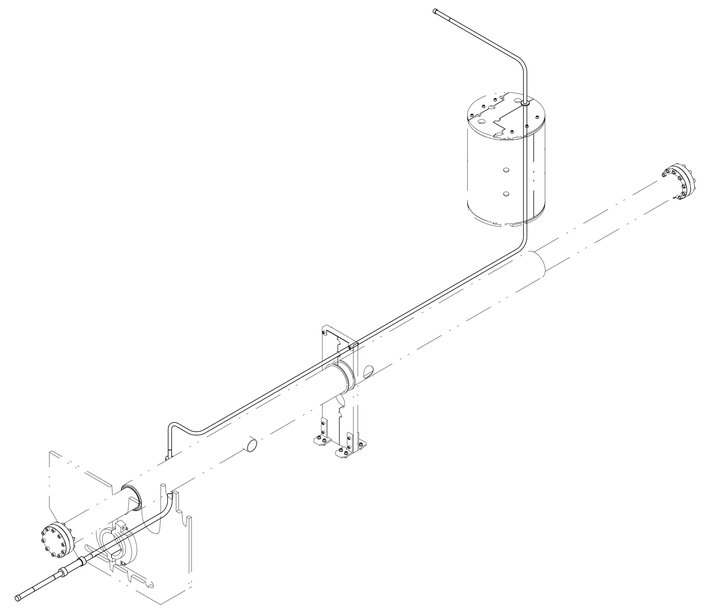

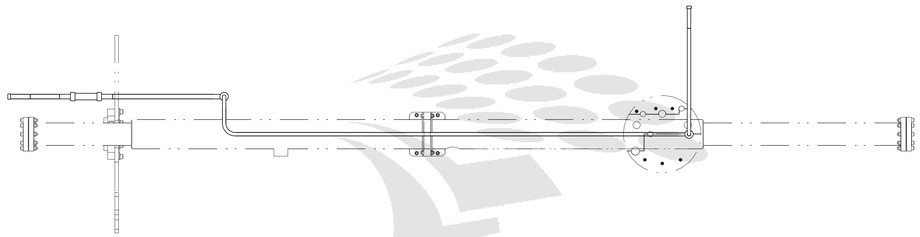

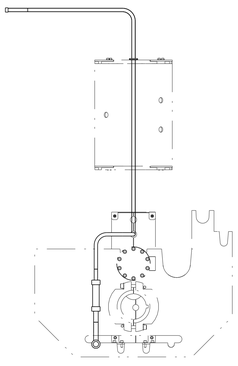

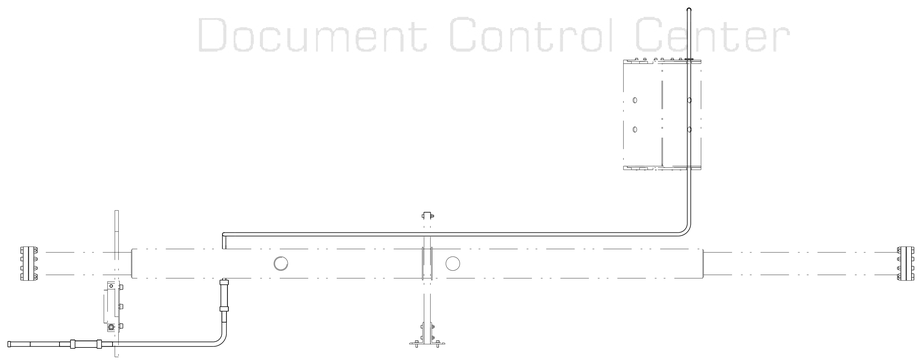

LBNL
Document Control Center

ERNEST ORLANDO LAWRENCE BERKELEY NATIONAL LABORATORY, UNIVERSITY OF CALIFORNIA - BERKELEY			
LHC IR FEEDBOX CRYOGENICS PIPING, DFBXF, IP5, RIGHT 24C395			
MICROFILMED:	DWG. TYPE: ASSEM	SHOWN ON: .	SCALE: 0.125 — DO NOT SCALE PRINTS SHEET 6 OF 11
PATENT CLEAR:	DESIGN ACCT. NO.: Z5LCE2	CATEGORY CODE: LH2001	DWG. NO.: 25i8746 — SIZE: B — REV.

DWG. NO. 25i8746 SIZE B REV 6

Officially Released to the LBNL Document Control Center
Released: March 5th, 2003 DCC Auth Key: OLRCD3GK40
Downloaded by: Daniel Pulsifer at April 09, 2007 10:57:44

E1 LINE

SHOWN FOR REFERENCE ONLY

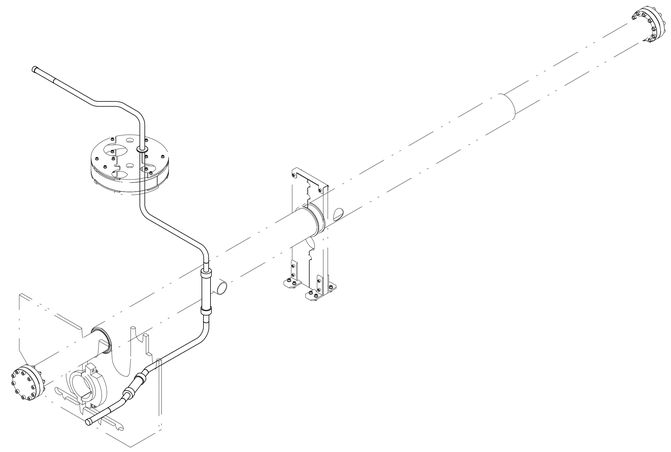

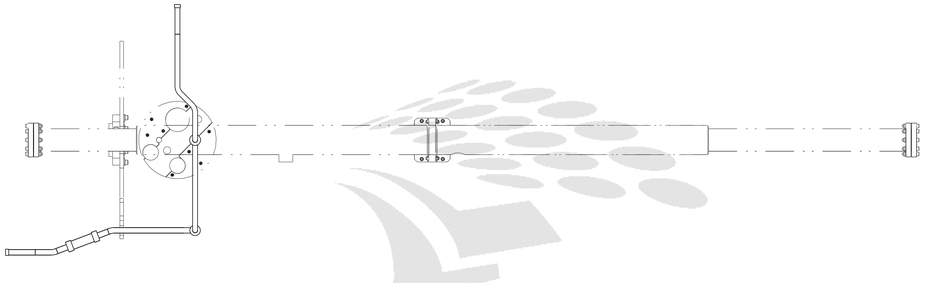

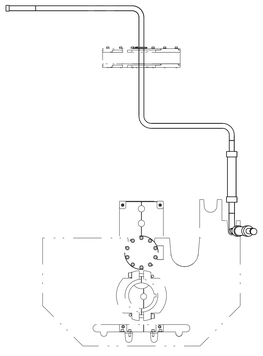

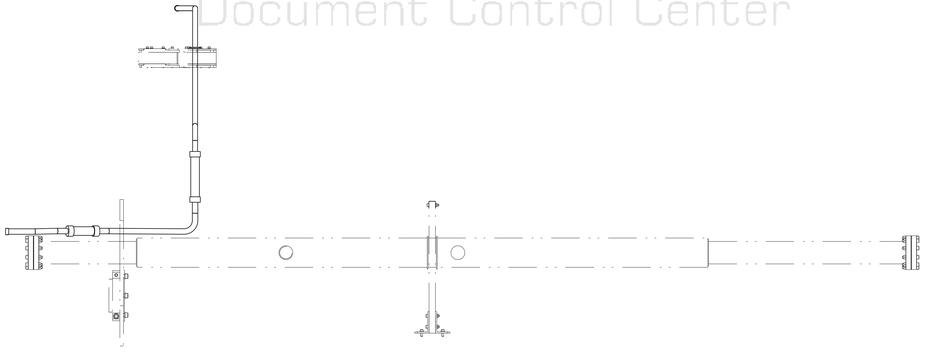

LBNL
Document Control Center

DWG. NO. 25i8746 SIZE B REV. 7

ERNEST ORLANDO LAWRENCE
BERKELEY NATIONAL LABORATORY
UNIVERSITY OF CALIFORNIA - BERKELEY

LHC IR FEEDBOX
CRYOGENICS
PIPING, DFBXF, IP5, RIGHT 24C395

MICROFILMED:	DWG. TYPE: ASSEM	SHOWN ON: -	SCALE: 0.125 DO NOT SCALE PRINTS
			SHEET 7 OF 11
PATENT CLEAR:	DESIGN ACCT. NO.: Z5LCE2	CATEGORY CODE: LH2001	DWG. NO.: 25i8746 SIZE: B REV.:

Officially Released to the LBNL Document Control Center
Released: March 5th, 2003 DCC Auth Key: OLRCD3GK40
Downloaded by: Daniel Pulsifer at April 09, 2007 10:57:44

EX LINE

SHOWN FOR REFERENCE ONLY

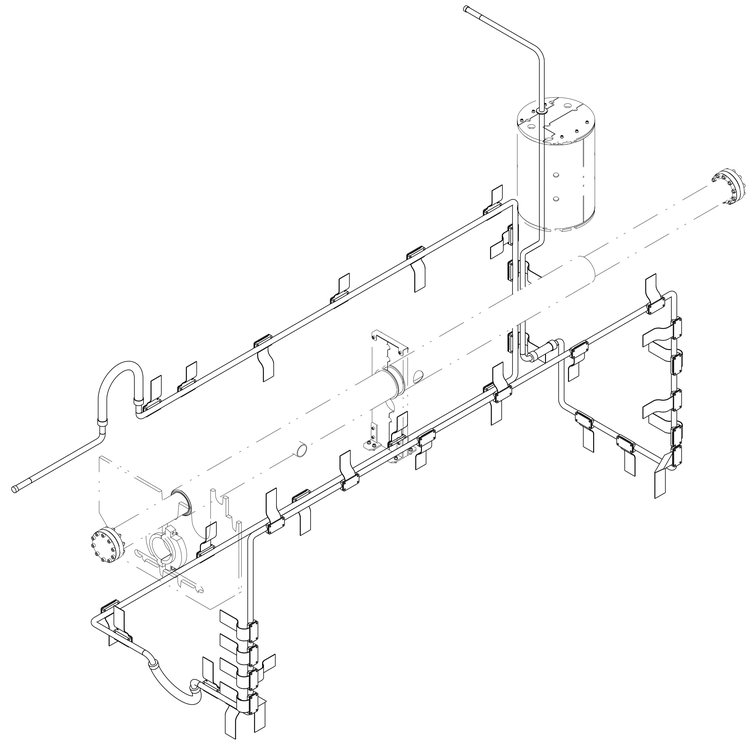

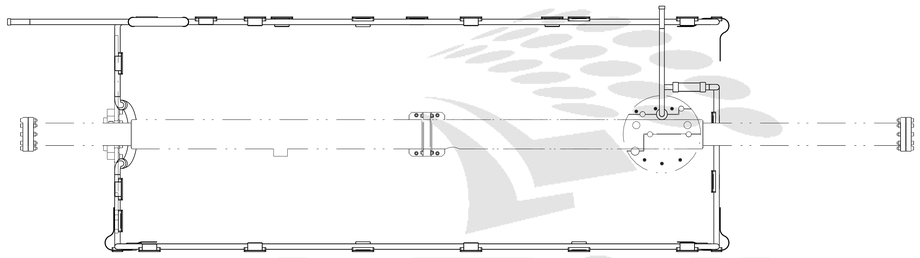

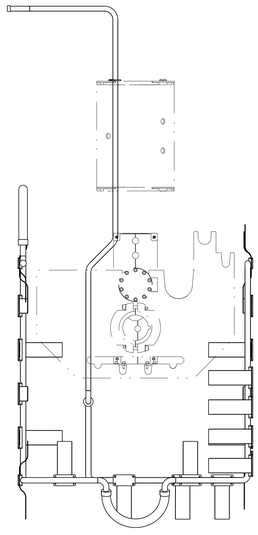

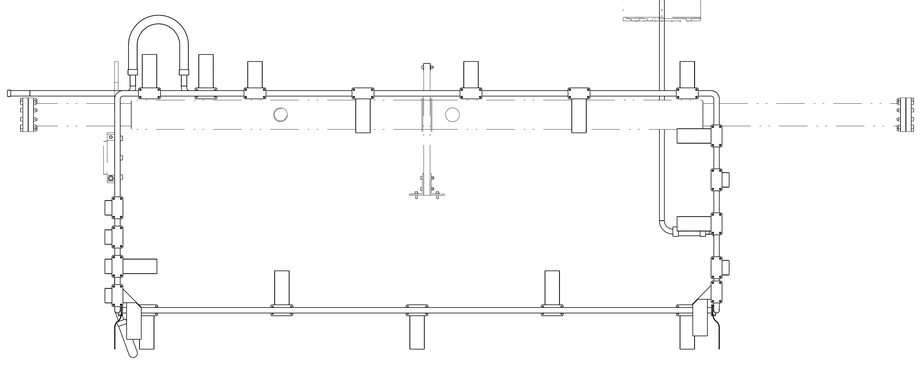

LBNL
Document Control Center

ERNEST ORLANDO LAWRENCE BERKELEY NATIONAL LABORATORY UNIVERSITY OF CALIFORNIA - BERKELEY				
LHC IR FEEDBOX CRYOGENICS PIPING, DFBXF, IP5, RIGHT 24C395				
MICROFILMED:	DWG. TYPE: ASSEM	SHOWN ON: .	SCALE: 0.125	DO NOT SCALE PRINTS
			SHEET 8 OF 11	
PATENT CLEAR:	DESIGN ACCT. NO.: Z5LCE2	CATEGORY CODE: LH2001	DWG. NO.: 25i8746	SIZE: B / REV.:

DWG. NO. 25i8746 | B | 8

Officially Released to the LBNL Document Control Center
Released: March 5th, 2003 DCC Auth Key: OLRCD3GK40

Downloaded by: Daniel Pulsifer at April 09, 2007 10:57:44

XB & CY LINES

SHOWN FOR REFERENCE ONLY

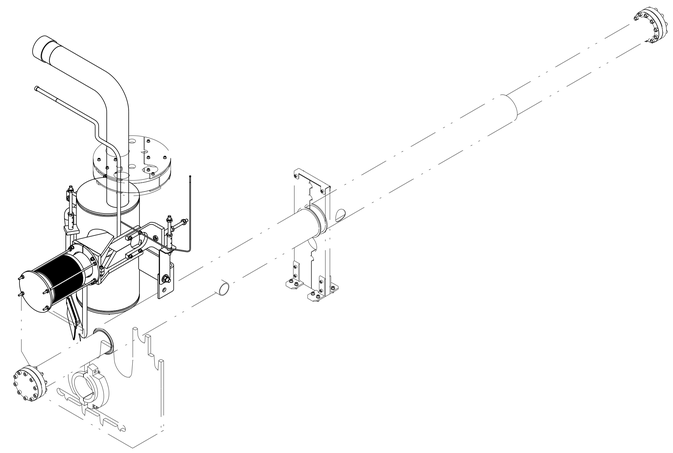

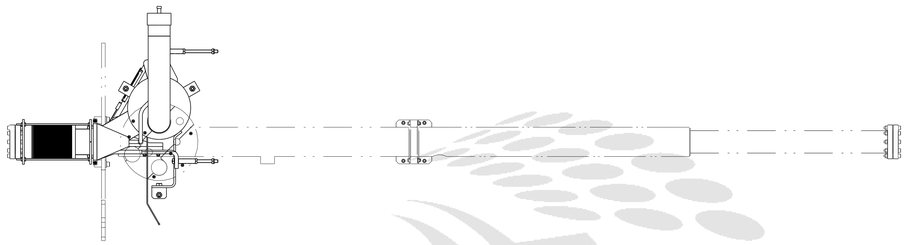

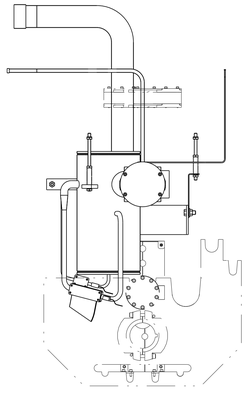

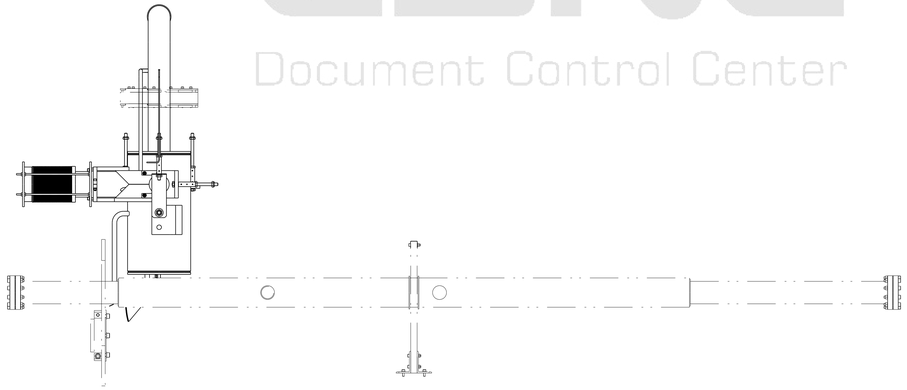

LBNL
Document Control Center

ERNEST ORLANDO LAWRENCE
BERKELEY NATIONAL LABORATORY
UNIVERSITY OF CALIFORNIA - BERKELEY

LHC IR FEEDBOX
CRYOGENICS
PIPING, DFBXF, IP5, RIGHT 24C395

MICROFILMED:	DWG. TYPE: ASSEM	SHOWN ON: -	SCALE: 0.125 DO NOT SCALE PRINTS
			SHEET 9 OF 11
PATENT CLEAR:	DESIGN ACCT. NO.: Z5LCE2	CATEGORY CODE: LH2001	DWG. NO.: 25i8746 SIZE: B REV.

DWG. NO. 25i8746 SHEET 9 REV. B

Officially Released to the LBNL Document Control Center
Released: March 5th, 2003 DCC Auth Key: OLRCD3GK40
Downloaded by: Daniel Pulsifer at April 09, 2007 10:57:44

BEAM TUBE

SHOWN FOR REFERENCE ONLY

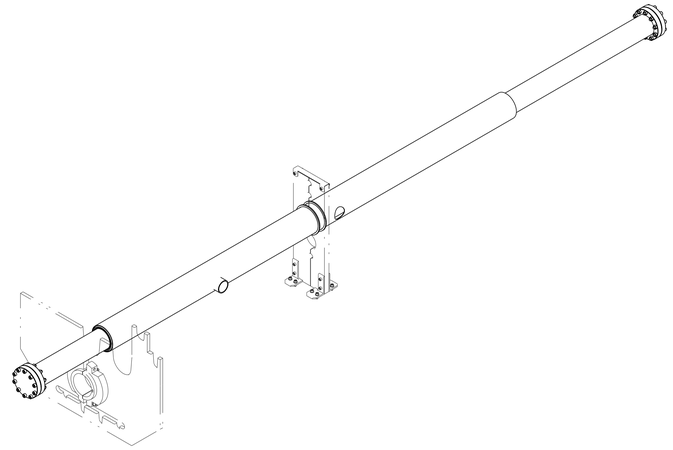

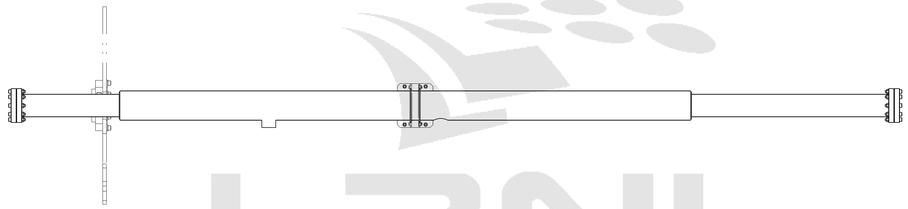

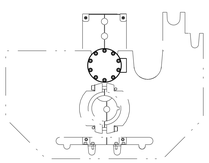

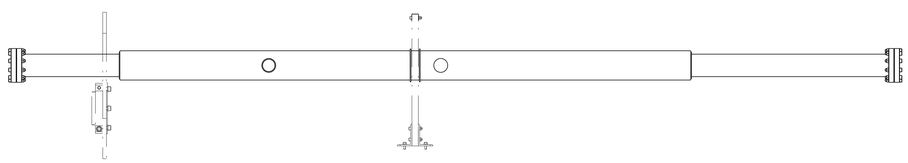

LBNL
Document Control Center

THIRD ANGLE PROJECTION

ERNEST ORLANDO LAWRENCE
BERKELEY NATIONAL LABORATORY
UNIVERSITY OF CALIFORNIA - BERKELEY

LHC IR FEEDBOX
CRYOGENICS
PIPING, DFBXF, IP5, RIGHT 24C395

MICROFILMED:	DWG. TYPE: ASSEM	SHOWN ON: -	SCALE: 0.125	DO NOT SCALE PRINTS
PATENT CLEAR:	DESIGN ACCT. NO.: Z5LCE2	CATEGORY CODE: LH2001	SHEET 10 OF 11	
			DWG. NO.: 25i8746	SIZE: B REV.

DWG. NO. 25i8746 SHEET REV. 10 B

Officially Released to the LBNL Document Control Center
Released: March 5th, 2003 DCC Auth Key: OLRCD3GK40

Downloaded by: Daniel Pulsifer at April 09, 2007 10:57:44

BUS DUCT ASSEMBLY

SHOWN FOR REFERENCE ONLY

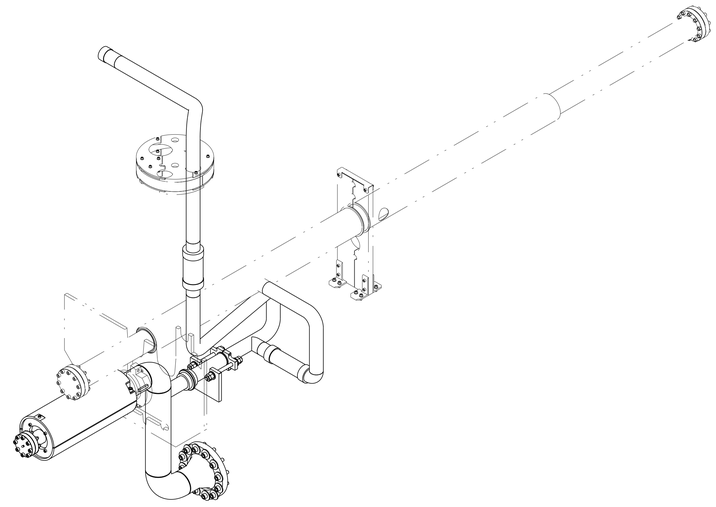

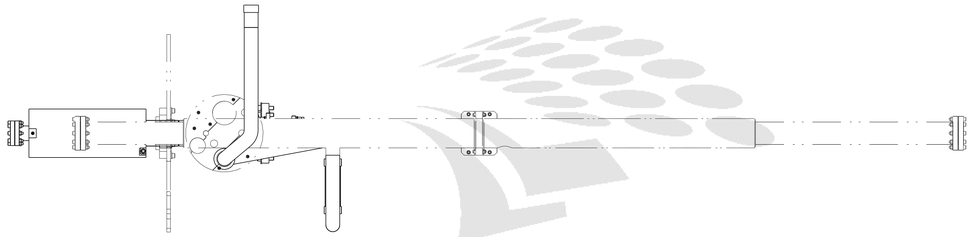

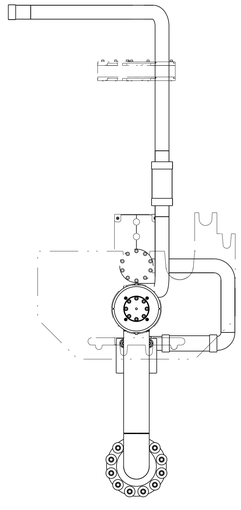

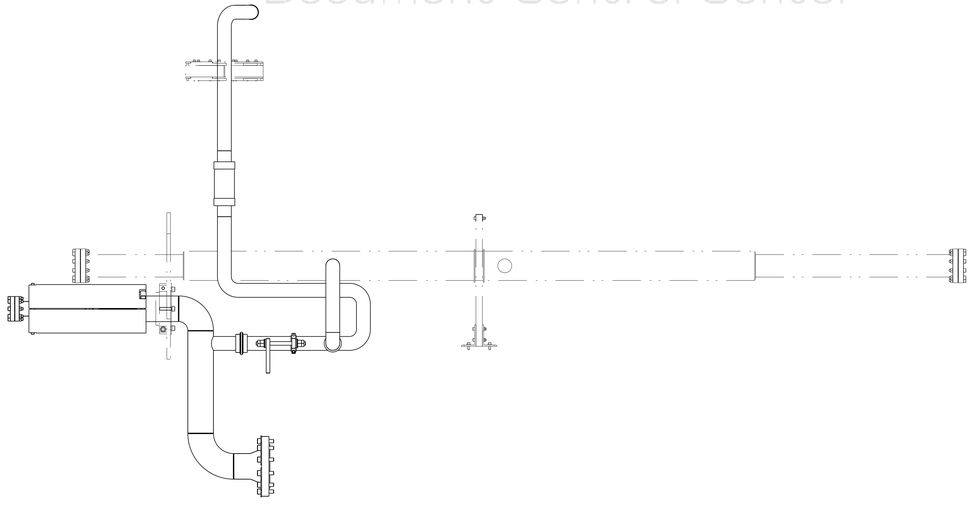

LBNL
Document Control Center

ERNEST ORLANDO LAWRENCE BERKELEY NATIONAL LABORATORY UNIVERSITY OF CALIFORNIA - BERKELEY			
LHC IR FEEDBOX CRYOGENICS PIPING, DFBXF, IP5, RIGHT 24C395			
MICROFILMED:	DWG. TYPE: ASSEM	SHOWN ON: .	SCALE: 0.125 / DO NOT SCALE PRINTS
			SHEET 11 OF 11
PATENT CLEAR:	DESIGN ACCT. NO.: Z5LCE2	CATEGORY CODE: LH2001	DWG. NO.: 25i8746 / SIZE: B / REV.

DWG. NO. 25i8746 SHEET 11 B

Officially Released to the LBNL Document Control Center
Released: March 5th, 2003 DCC Auth Key: OLRCD3GK40
Downloaded by: Daniel Pulsifer at April 09, 2007 10:57:44