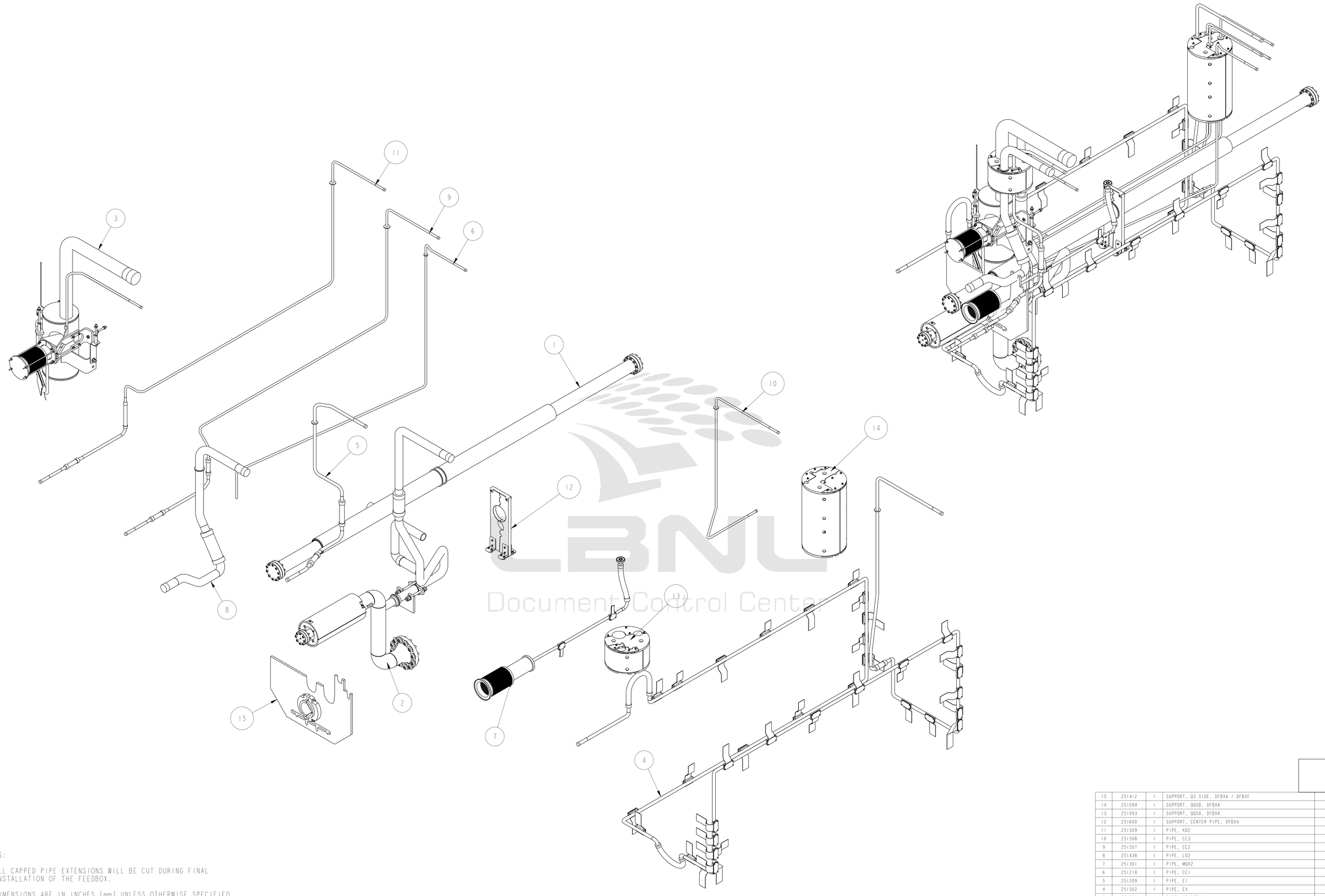

NOTES:

1. ALL CAPPED PIPE EXTENSIONS WILL BE CUT DURING FINAL INSTALLATION OF THE FEEDBOX.
2. DIMENSIONS ARE IN INCHES [mm] UNLESS OTHERWISE SPECIFIED.
3. ALL PIPES TO BE INSULATED PER MLI SPECIFICATION PROVIDED BY VENDOR AND SUBJECT TO LBNL APPROVAL. IN LOCATIONS WHERE PIPES PASS THROUGH SUPPORT ASSEMBLIES, INSULATION IS TO BE WRAPPED WITH KAPTON TAPE FOR PROTECTION FROM ABRASION DURING THERMAL CYCLING.

ITEM	PART NO	REQD	DESCRIPTION	MATERIAL
15	251412	1	SUPPORT, Q3 SIDE, DFBXA / DFBXF	NEMA G10
14	251094	1	SUPPORT, QQSB, DFBXA	NEMA G10
13	251093	1	SUPPORT, QQSA, DFBXA	NEMA G10
12	251600	1	SUPPORT, CENTER PIPE, DFBXA	-
11	251509	1	PIPE, KD2	-
10	251508	1	PIPE, CC3	-
9	251507	1	PIPE, CC2	-
8	251438	1	PIPE, LD2	-
7	251301	1	PIPE, MQX2	-
6	251218	1	PIPE, CC1	-
5	251209	1	PIPE, E1	-
4	251502	1	PIPE, EX	-
3	251526	1	PIPE, XB DFBXA	-
2	251515	1	PIPE WELDMENT, LD1 AND BUS DUCT	-
1	251510	1	V PIPE & JACKET ASSEMBLY	-

THIRD ANGLE PROJECTION

REV	DWG	CHK	ZONE	DATE	CHANGES
B	ARH	DPO		02/20/03	UPDATED SUBASSEMBLY VIEWS
A	MJK	DPO		11/25/02	INITIAL RELEASE

UNLESS OTHERWISE SPECIFIED

TOLERANCES		
	X.X ± 0.1	FRAC. ± 1/64
	X.XX ± 0.03	Angles ± 1.00°
	X.XXX ± 0.010	FINISH 125/

DO NOT SCALE PRINT

THREADS ARE CLASS 2
CHAMFER ENDS OF ALL SCREW TREADS 30°
CUT ROUND, 1.5 THREAD RELIEF ON MACHINED THREADS
BREAK EDGES .016 MAX. ON MACHINED WORK
REMOVE BURRS, WELD SPLATTER & LOOSE SCALE
IN ACCORDANCE WITH ASME Y14.5M & B46.1

SHOP ORDERS

ACCT NO.	NO. REQD	DATE ISSD	-
DEL TO		DATE REQD	-
SURFACE TREATMT	-		
IDENT METHOD	TAG		
PROJECT NUMBER	N/A		
PROJECT NAME	N/A		
DWG BY	KNOLLS	DATE	29-Mar-02
CHK BY	D. OSHATZ	DATE	11/25/02
APR BY	D. OSHATZ	DATE	11/25/02

ERNEST ORLANDO LAWRENCE BERKELEY NATIONAL LABORATORY
UNIVERSITY OF CALIFORNIA - BERKELEY

LHC IR FEEDBOX
CRYOGENICS
PIPING DFBXA IP1, LEFT 24C351

MICROFILMED:	DWG. TYPE	SHOWN ON	SCALE: 0.125	DO NOT SCALE PRINTS
	ASSEM	.	SHEET 1 OF 11	
PATENT CLEAR:	DESIGN ACCT. NO.	CATEGORY CODE	DWG. NO.	SIZE / REV.
	Z5LCE2	LH2003	2518726	B

DWG. NO. 2518726 SIZE B REV. SH. 1

Officially Released to the LBNL Document Control Center
Released: March 5th, 2003 DCC Auth Key: VOO96YCBLG
Downloaded by: Daniel Pulsifer at April 09, 2007 10:57:43

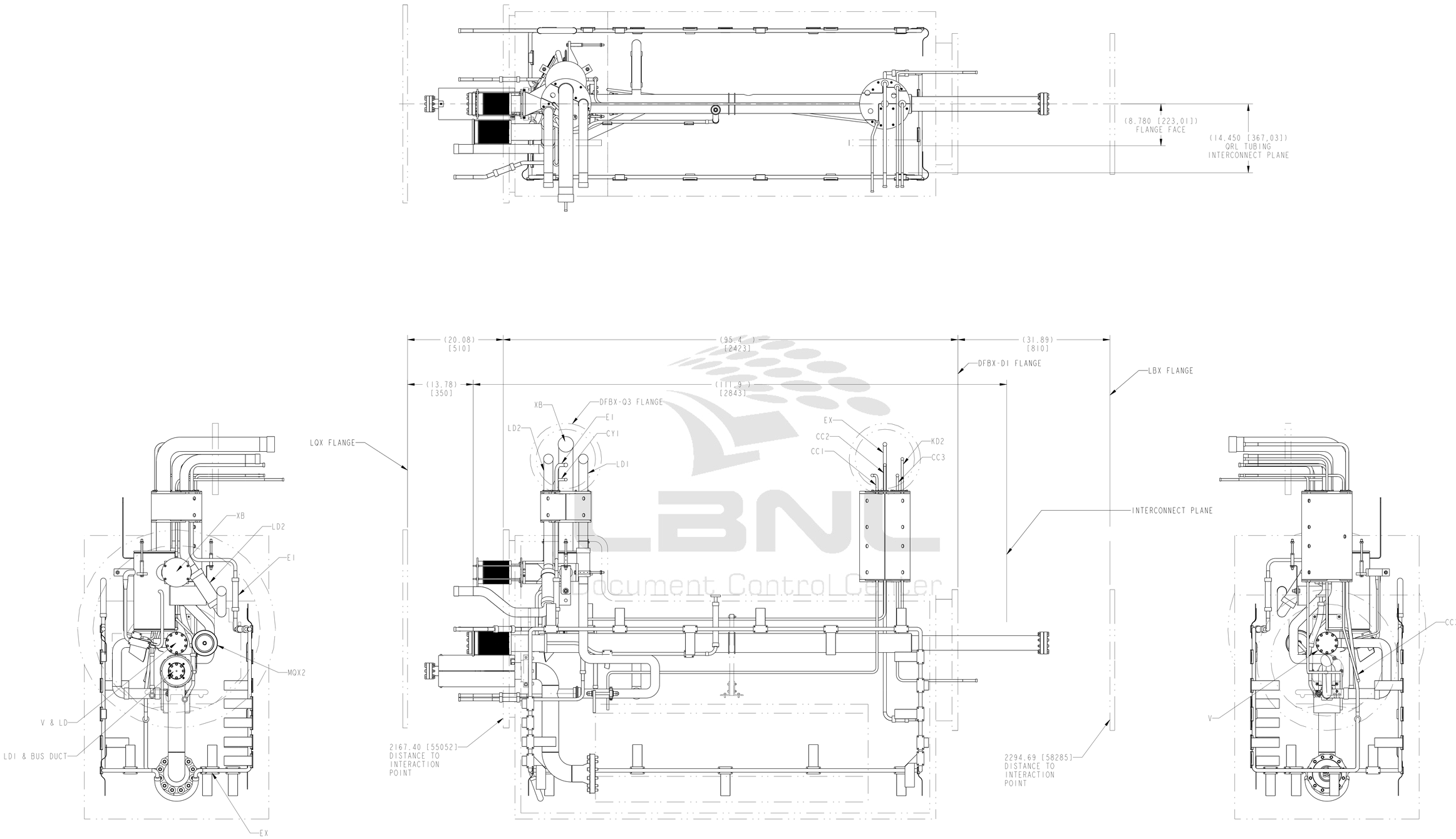

ERNEST ORLANDO LAWRENCE
BERKELEY NATIONAL LABORATORY
UNIVERSITY OF CALIFORNIA - BERKELEY

LHC IR FEEDBOX
CRYOGENICS
PIPING DFBXA IP1, LEFT 24C351

MICROFILMED:	DWG. TYPE	SHOWN ON	SCALE: 0.130	DO NOT SCALE PRINTS
	ASSEM	.	SHEET 2 OF 11	
PATENT CLEAR:	DESIGN ACCT. NO.	CATEGORY CODE	DWG. NO.	SIZE / REV.
	Z5LCE2	LH2003	2518726	B

DWG. NO. 2518726 SIZE B REV. 2

Officially Released to the LBNL Document Control Center
Released: March 5th, 2003 DCC Auth Key: VOO96YCBLG
Downloaded by: Daniel Pulsifer at April 09, 2007 10:57:43

INSTRUMENTATION LINES

SHOWN FOR REFERENCE ONLY
NOTE: ALL WELDS MUST LEAVE TUBE
INTERIOR BURR FREE

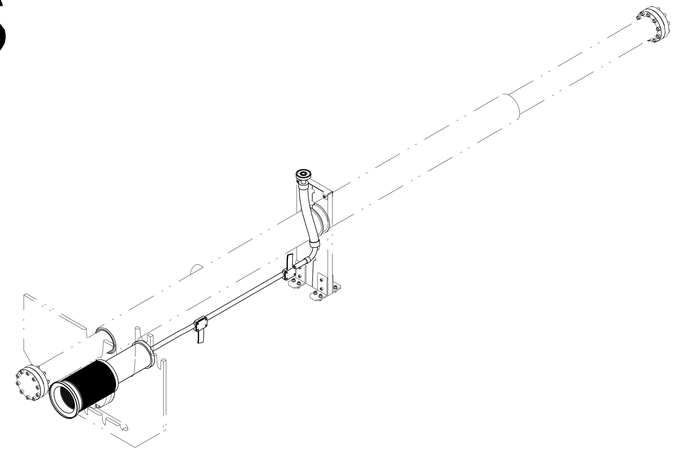

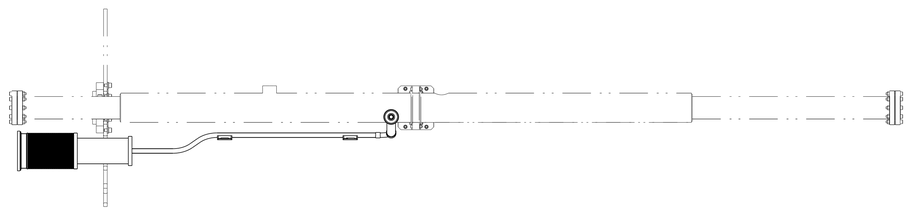

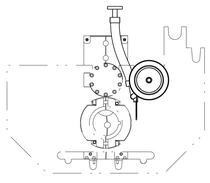

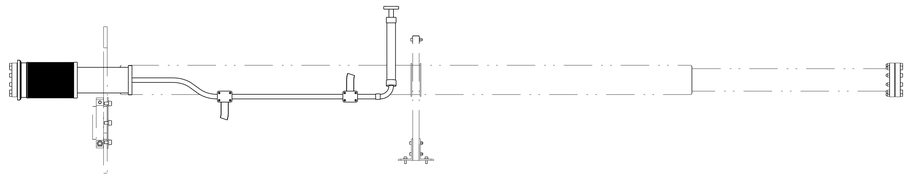

LBNL
Document Control Center

ERNEST ORLANDO LAWRENCE BERKELEY NATIONAL LABORATORY UNIVERSITY OF CALIFORNIA - BERKELEY			
LHC IR FEEDBOX CRYOGENICS PIPING DFBXA IP1, LEFT 24C351			
MICROFILMED:	DWG. TYPE ASSEM	SHOWN ON -	SCALE: 0.125 DO NOT SCALE PRINTS
			SHEET 3 OF 11
PATENT CLEAR:	DESIGN ACCT. NO. Z5LCE2	CATEGORY CODE LH2003	DWG. NO. 2518726 SIZE B REV.

DWG. NO. 2518726 SIZE B REV. 3 SH. 3

Officially Released to the LBNL Document Control Center
Released: March 5th, 2003 DCC Auth Key: VOO96YCBLG
Downloaded by: Daniel Pulsifer at April 09, 2007 10:57:43

LD LINES

SHOWN FOR REFERENCE ONLY

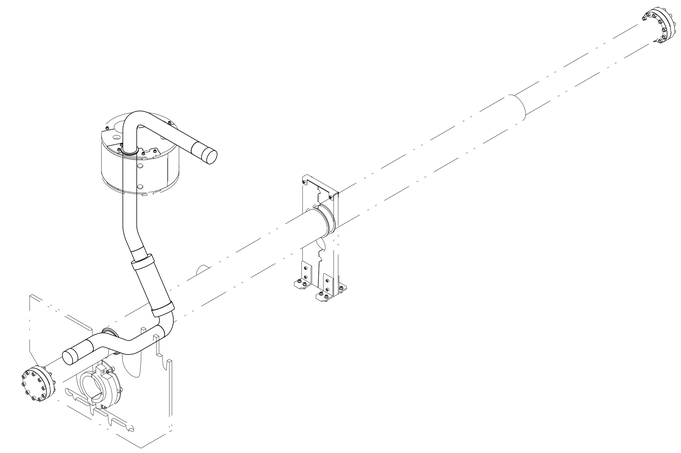

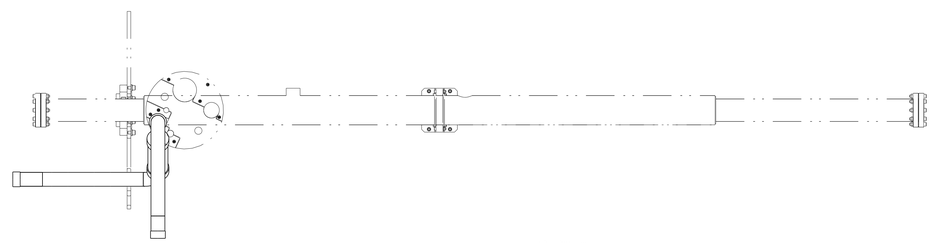

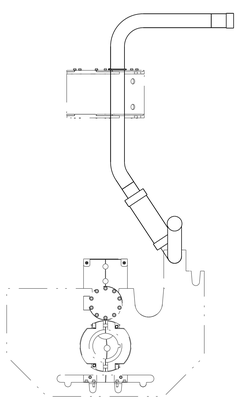

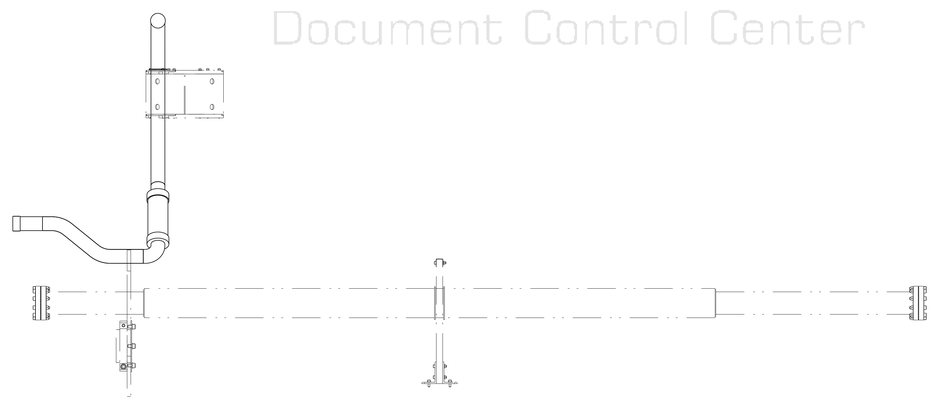

LBNL
Document Control Center

ERNEST ORLANDO LAWRENCE
BERKELEY NATIONAL LABORATORY
UNIVERSITY OF CALIFORNIA - BERKELEY

LHC IR FEEDBOX
CRYOGENICS
PIPING DFBXA IP1, LEFT 24C351

MICROFILMED:	DWG. TYPE	SHOWN ON	SCALE: 0.125	DO NOT SCALE PRINTS
	ASSEM	.	SHEET 4 OF 11	
PATENT CLEAR:	DESIGN ACCT. NO.	CATEGORY CODE	DWG. NO.	SIZE / REV.
	Z5LCE2	LH2003	2518726	B

DWG. NO. 2518726 SIZE B REV. SH. 4

Officially Released to the LBNL Document Control Center
Released: March 5th, 2003 DCC Auth Key: VOO96YCBLG
Downloaded by: Daniel Pulsifer at April 09, 2007 10:57:43

CC LINES

SHOWN FOR REFERENCE ONLY

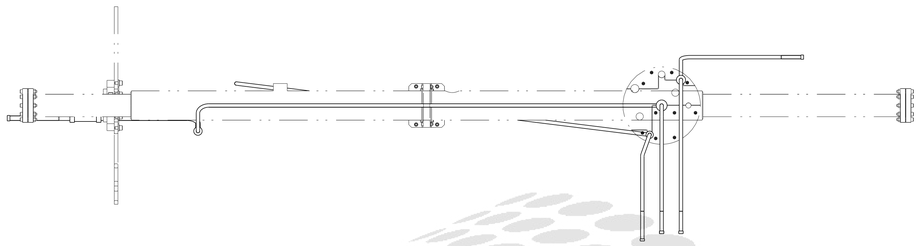

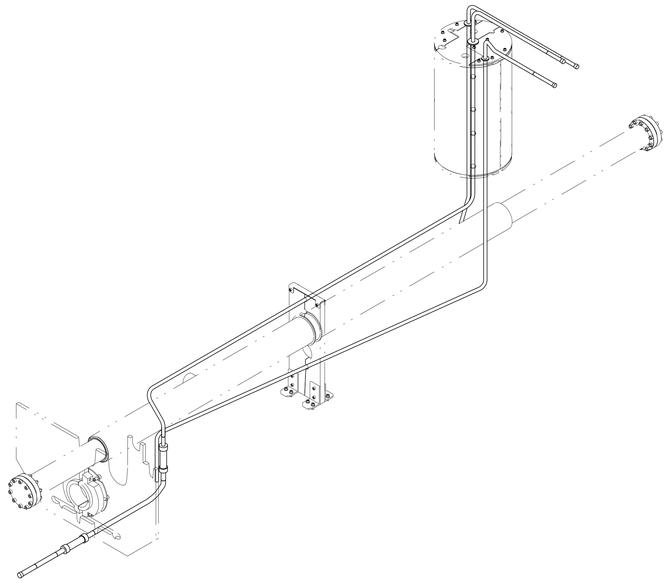

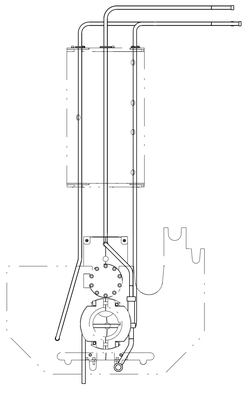

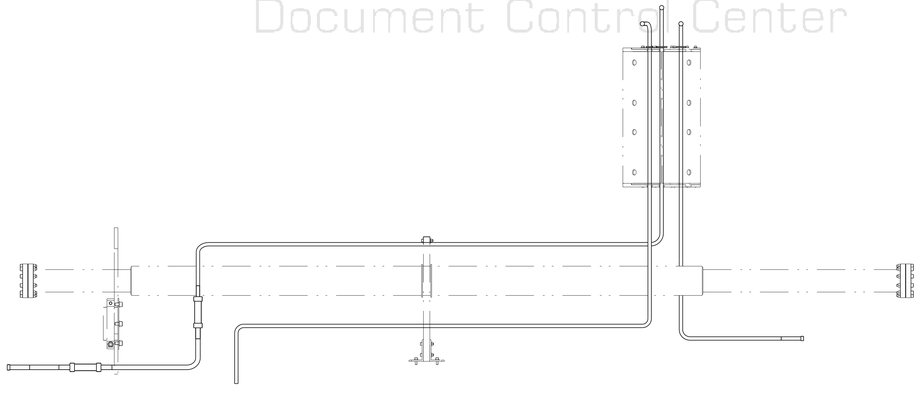

LBNL
Document Control Center

ERNEST ORLANDO LAWRENCE
BERKELEY NATIONAL LABORATORY
UNIVERSITY OF CALIFORNIA - BERKELEY

LHC IR FEEDBOX
CRYOGENICS
PIPING DFBXA IP1, LEFT 24C351

MICROFILMED:	DWG. TYPE	SHOWN ON	SCALE: 0.125	DO NOT SCALE PRINTS
	ASSEM	-	SHEET 5 OF 11	
PATENT CLEAR:	DESIGN ACCT. NO.	CATEGORY CODE	DWG. NO.	SIZE / REV.
	Z5LCE2	LH2003	2518726	B

DWG. NO. 2518726 SIZE/REV. B SH. 5

Officially Released to the LBNL Document Control Center
Released: March 5th, 2003 DCC Auth Key: VOO96YCBLG
Downloaded by: Daniel Pulsifer at April 09, 2007 10:57:43

KD2 LINE

SHOWN FOR REFERENCE ONLY

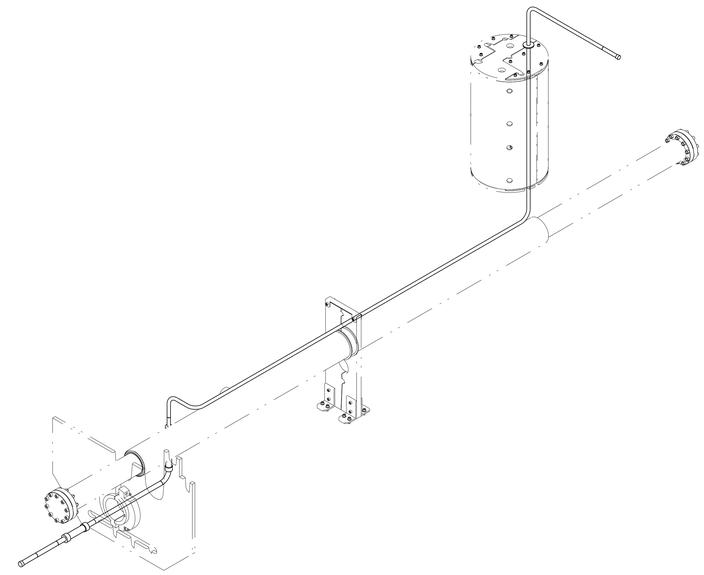

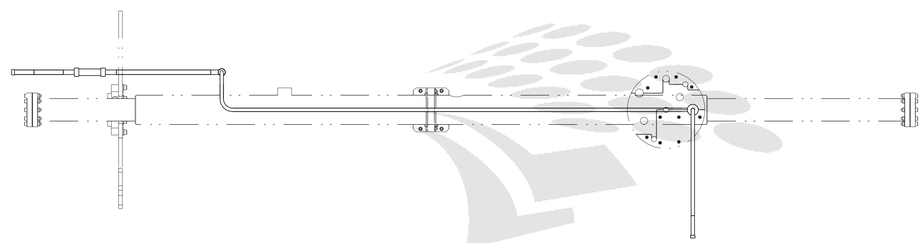

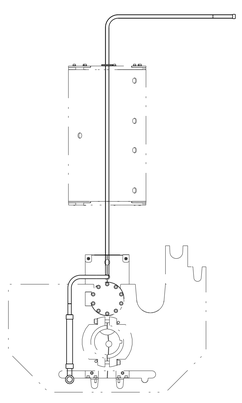

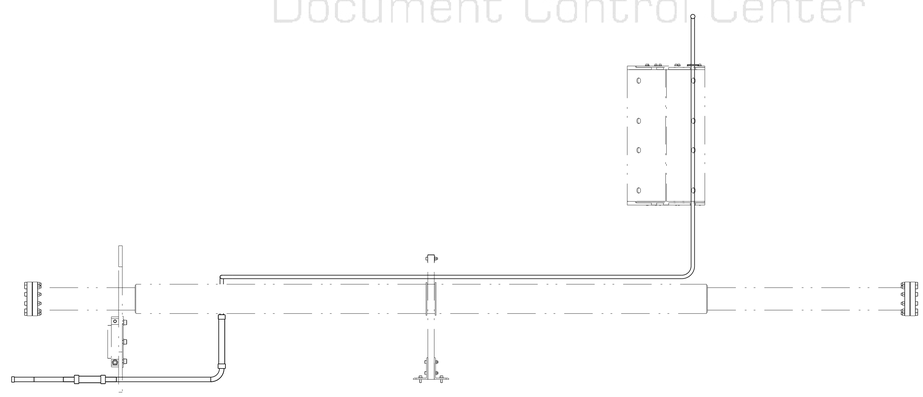

LBNL
Document Control Center

ERNEST ORLANDO LAWRENCE
BERKELEY NATIONAL LABORATORY
UNIVERSITY OF CALIFORNIA - BERKELEY

LHC IR FEEDBOX
CRYOGENICS
PIPING DFBXA IP1, LEFT 24C351

MICROFILMED:	DWG. TYPE	SHOWN ON	SCALE: 0.125	DO NOT SCALE PRINTS
	ASSEM	.	SHEET 6 OF 11	
PATENT CLEAR:	DESIGN ACCT. NO.	CATEGORY CODE	DWG. NO.	SIZE / REV.
	Z5LCE2	LH2003	2518726	B

DWG. NO. 2518726 B 6

Officially Released to the LBNL Document Control Center
Released: March 5th, 2003 DCC Auth Key: VOO96YCBLG
Downloaded by: Daniel Pulsifer at April 09, 2007 10:57:43

E1 LINE

SHOWN FOR REFERENCE ONLY

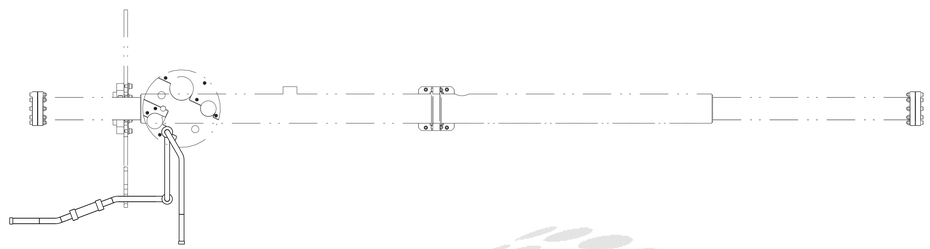

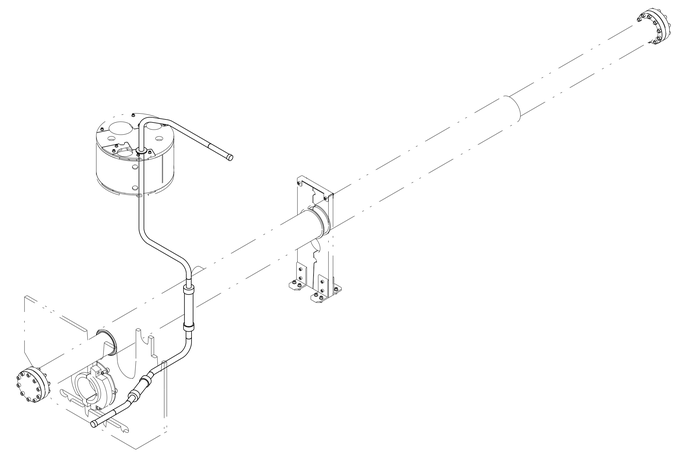

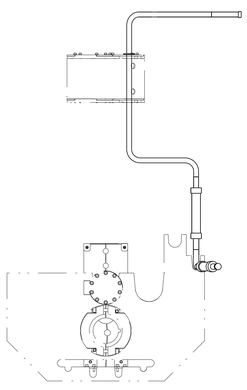

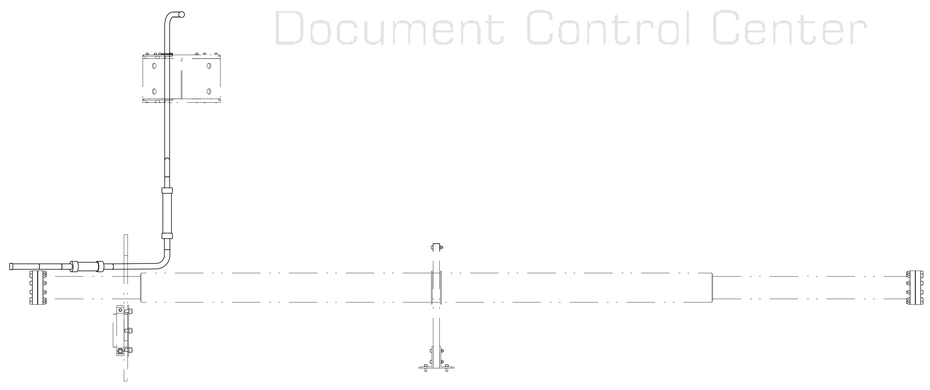

LBNL
Document Control Center

ERNEST ORLANDO LAWRENCE BERKELEY NATIONAL LABORATORY UNIVERSITY OF CALIFORNIA - BERKELEY			
LHC IR FEEDBOX CRYOGENICS PIPING DFBXA IP1, LEFT 24C351			
MICROFILMED:	DWG. TYPE ASSEM	SHOWN ON -	SCALE: 0.125 DO NOT SCALE PRINTS
			SHEET 7 OF 11
PATENT CLEAR:	DESIGN ACCT. NO. Z5LCE2	CATEGORY CODE LH2003	DWG. NO. 2518726 SIZE B REV.

DWG. NO. 2518726 SIZE B REV. LTR 7

Officially Released to the LBNL Document Control Center
Released: March 5th, 2003 DCC Auth Key: VOO96YCBLG
Downloaded by: Daniel Pulsifer at April 09, 2007 10:57:43

EX LINE

SHOWN FOR REFERENCE ONLY

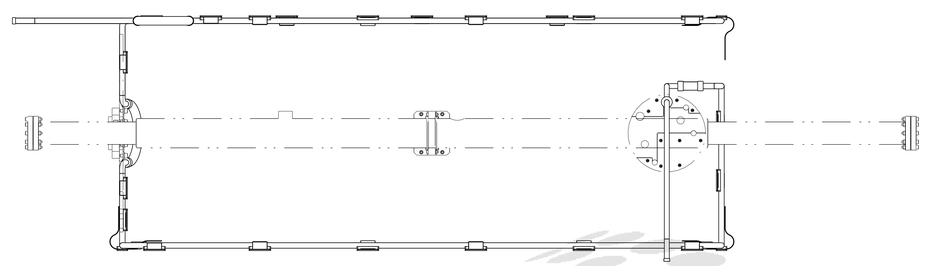

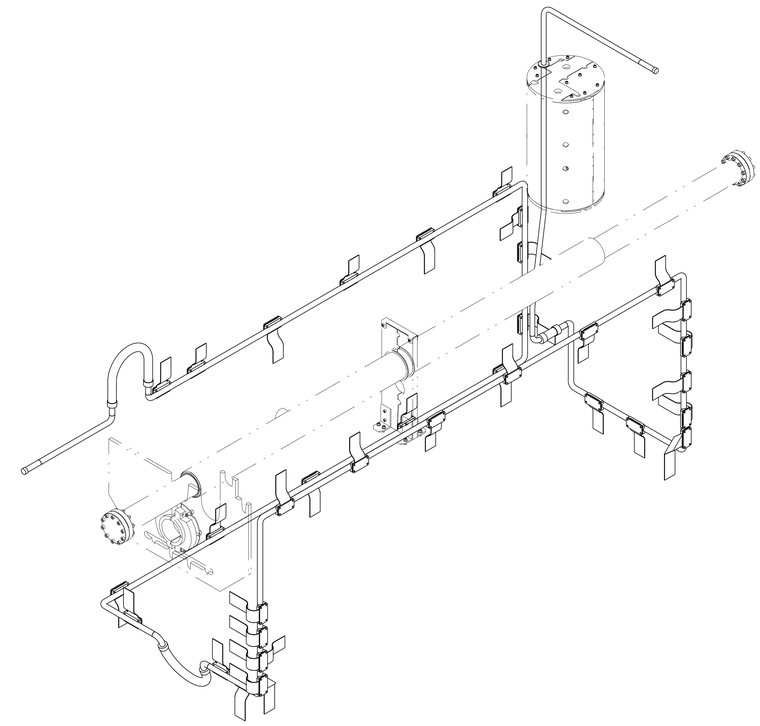

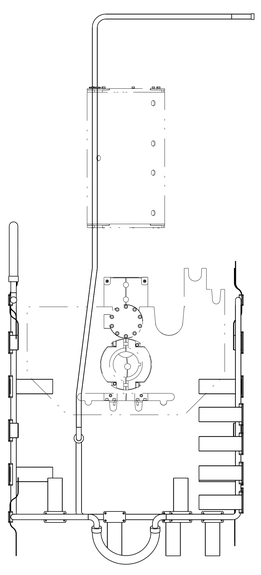

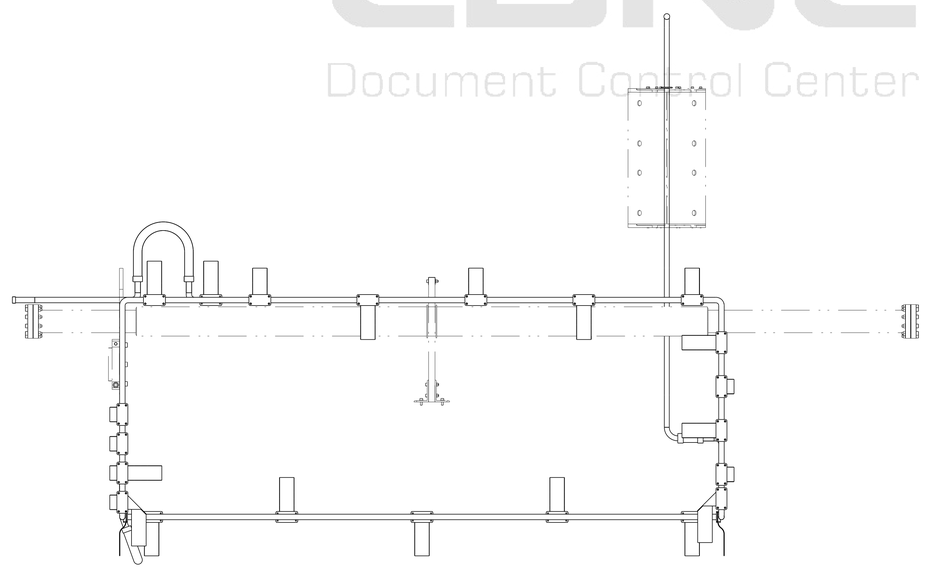

LBNL
Document Control Center

ERNEST ORLANDO LAWRENCE
BERKELEY NATIONAL LABORATORY
UNIVERSITY OF CALIFORNIA - BERKELEY

LHC IR FEEDBOX
CRYOGENICS
PIPING DFBXA IP1, LEFT 24C351

MICROFILMED:	DWG. TYPE	SHOWN ON	SCALE: 0.125	DO NOT SCALE PRINTS
	ASSEM	-	SHEET 8 OF 11	
PATENT CLEAR:	DESIGN ACCT. NO.	CATEGORY CODE	DWG. NO.	SIZE / REV.
	Z5LCE2	LH2003	2518726	B

DWG. NO. 2518726 SIZE/REV. B SH. 8

Officially Released to the LBNL Document Control Center
Released: March 5th, 2003 DCC Auth Key: VOO96YCBLG
Downloaded by: Daniel Pulsifer at April 09, 2007 10:57:43

XB & CY LINES

SHOWN FOR REFERENCE ONLY

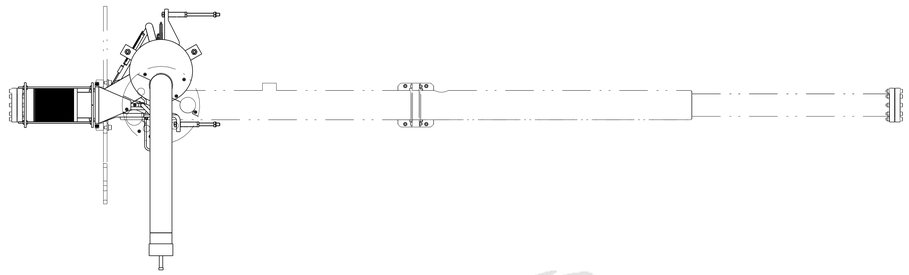

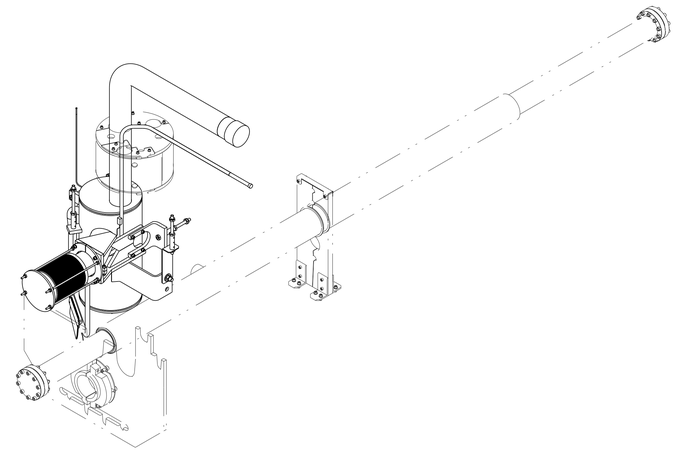

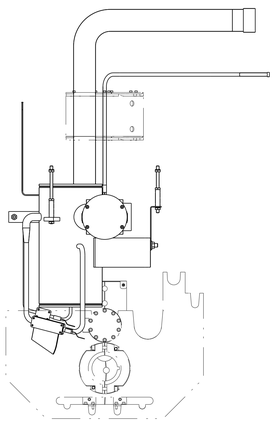

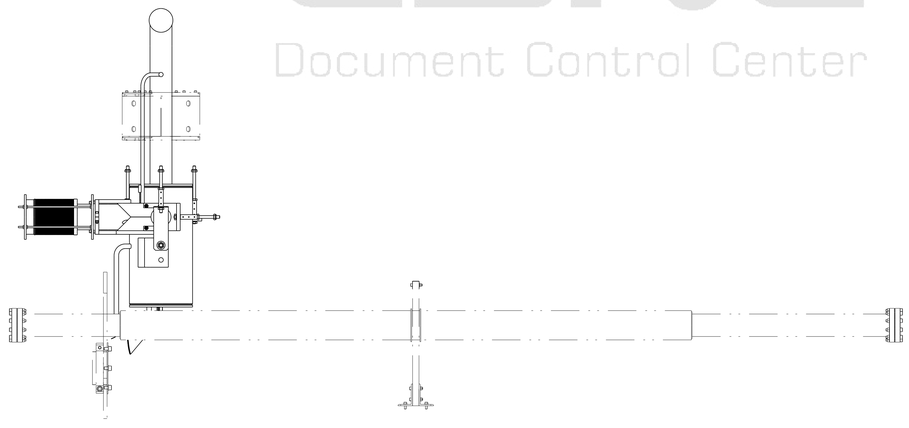

LBNL
Document Control Center

ERNEST ORLANDO LAWRENCE BERKELEY NATIONAL LABORATORY UNIVERSITY OF CALIFORNIA - BERKELEY			
LHC IR FEEDBOX CRYOGENICS PIPING DFBXA IP1, LEFT 24C351			
MICROFILMED:	DWG. TYPE ASSEM	SHOWN ON -	SCALE: 0.125 DO NOT SCALE PRINTS
			SHEET 9 OF 11
PATENT CLEAR:	DESIGN ACCT. NO. Z5LCE2	CATEGORY CODE LH2003	DWG. NO. 2518726 SIZE B REV.

DWG. NO. 2518726 SIZE B REV. LTR 9

Officially Released to the LBNL Document Control Center
Released: March 5th, 2003 DCC Auth Key: VOO96YCBLG
Downloaded by: Daniel Pulsifer at April 09, 2007 10:57:43

BEAM TUBE

SHOWN FOR REFERENCE ONLY

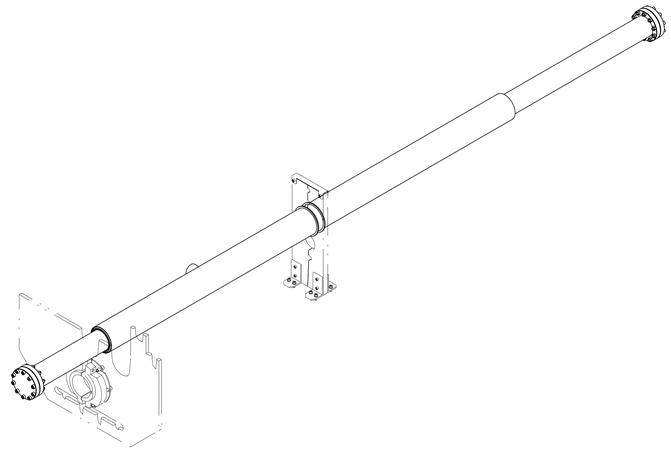

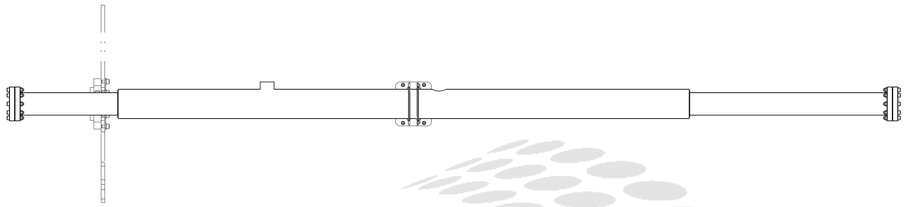

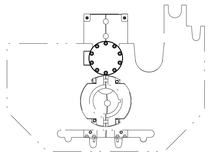

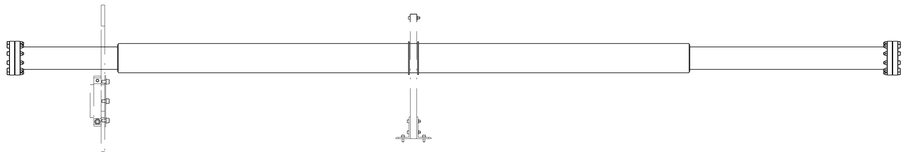

LBNL
Document Control Center

ERNEST ORLANDO LAWRENCE BERKELEY NATIONAL LABORATORY UNIVERSITY OF CALIFORNIA - BERKELEY			
LHC IR FEEDBOX CRYOGENICS PIPING DFBXA IP1, LEFT 24C351			
MICROFILMED:	DWG. TYPE ASSEM	SHOWN ON -	SCALE: 0.125 DO NOT SCALE PRINTS
			SHEET 10 OF 11
PATENT CLEAR:	DESIGN ACCT. NO. Z5LCE2	CATEGORY CODE LH2003	DWG. NO. 2518726 SIZE B REV.

DWG. NO. 2518726 SIZE B REV. 10

Officially Released to the LBNL Document Control Center
Released: March 5th, 2003 DCC Auth Key: VOO96YCBLG
Downloaded by: Daniel Pulsifer at April 09, 2007 10:57:43

BUS DUCT ASSEMBLY

SHOWN FOR REFERENCE ONLY

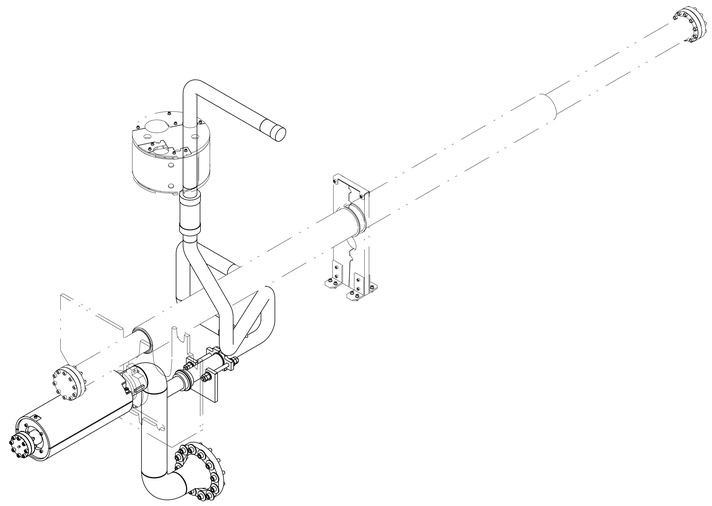

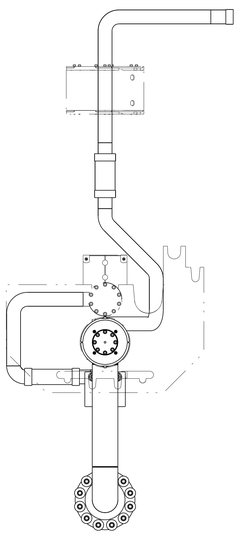

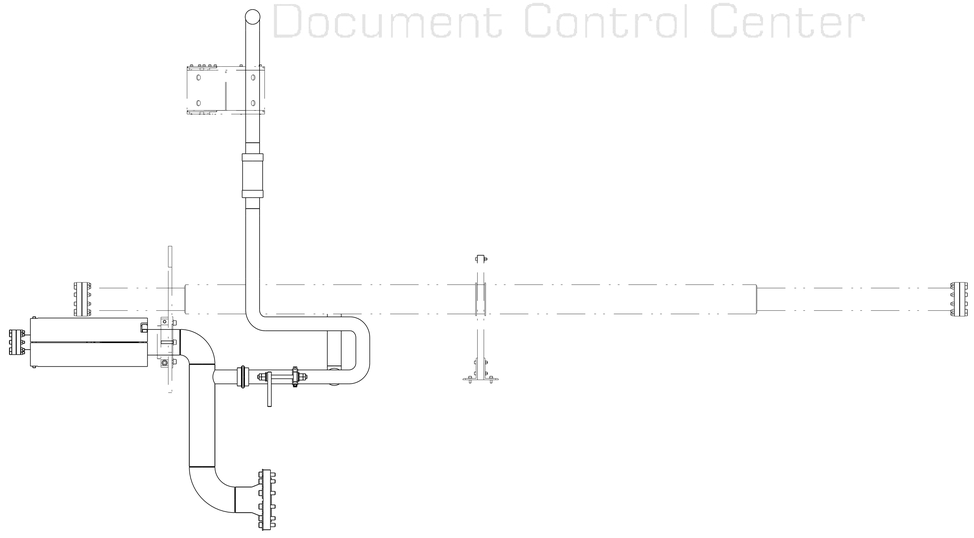

LBNL
Document Control Center

ERNEST ORLANDO LAWRENCE BERKELEY NATIONAL LABORATORY UNIVERSITY OF CALIFORNIA - BERKELEY			
LHC IR FEEDBOX CRYOGENICS PIPING DFBXA 1P1, LEFT 24C351			
MICROFILMED:	DWG. TYPE ASSEM	SHOWN ON .	SCALE: 0.125 DO NOT SCALE PRINTS
			SHEET 11 OF 11
PATENT CLEAR:	DESIGN ACCT. NO. Z5LCE2	CATEGORY CODE LH2003	DWG. NO. 2518726 TYPE REV. B

DWG. NO. 2518726 SIZE B SHT. 11

Officially Released to the LBNL Document Control Center
Released: March 5th, 2003 DCC Auth Key: VOO96YCBLG
Downloaded by: Daniel Pulsifer at April 09, 2007 10:57:43