THIS ASSEMBLY IS FOR INFORMATIONAL PURPOSES ONLY.
ALL COMPONENTS ARE INSTALLED IN OTHER ASSEMBLIES.

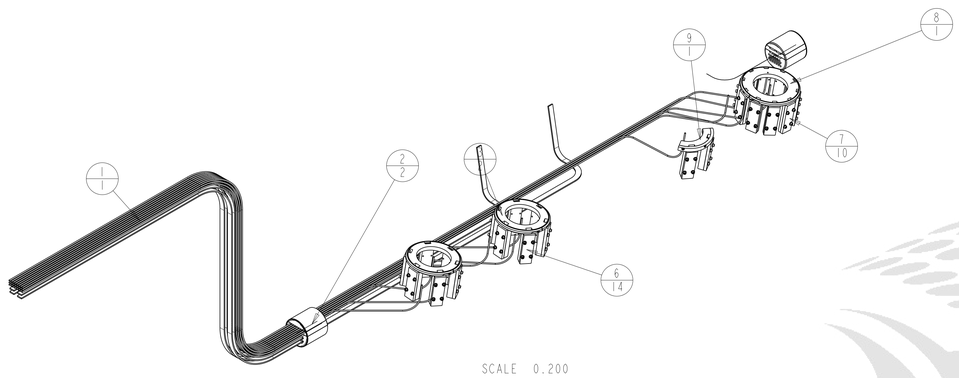

ITEM #9, 600 AMP CONDUCTOR STIFFENER ASSEMBLY, SINGLE PAIR

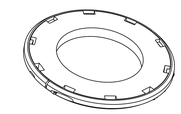

ITEM #8, 120 AMP CONDUCTOR STIFFENER ASSEMBLY

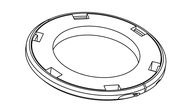

ITEM #3, 600 AMP CONDUCTOR STIFFENER ASSEMBLY

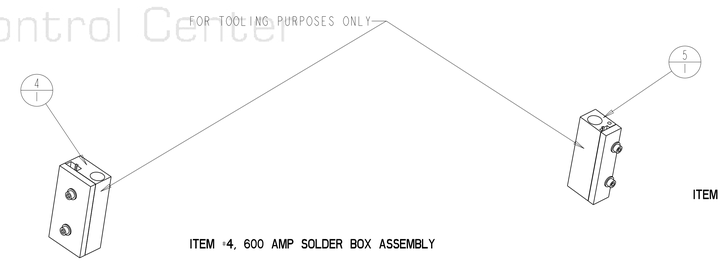

ITEM #5, 120 AMP SOLDER BOX ASSEMBLY

ITEM #4, 600 AMP SOLDER BOX ASSEMBLY

ITEM #7, 120 AMP CONDUCTOR CLAMP ASSEMBLY

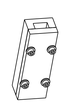

ITEM #6, 600 CONDUCTOR CLAMP ASSEMBLY

ITEM	PART NO	REQD	DESCRIPTION	MATERIAL
9	25M904	1	600 AMP CONDUCTOR STIFFENER ASSEMBLY, SINGLE PAIR	-
8	251496	1	120 AMP CONDUCTOR STIFFENER ASSEMBLY	-
7	251494	10	120 AMP CONDUCTOR FEEDBOX	-
6	251493	14	600 AMP CONDUCTOR CLAMP ASSEMBLY	-
5	251492	1	120 Amp Solder Box Assembly	-
4	251491	1	600 Amp Solder Box Assembly	-
3	251486	2	600 AMP CONDUCTOR STIFFENER ASSEMBLY	-
2	251255	2	LAMBDA PLUG INSERT	NEMA G10
1	-	1	BUS DUCT ASSY ENV	-

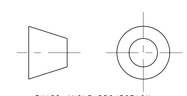

THIRD ANGLE PROJECTION

REV	DWG	CHK	ZONE	DATE	CHANGES
A	SB	DPO		9-19-02	INITIAL RELEASE

UNLESS OTHERWISE SPECIFIED
TOLERANCES: X.X ± 0.1 FRAC. ± 1/64; X.XX ± 0.03 Angles ± 1.00°; X.XXX ± 0.010 FINISH 125/1000
DO NOT SCALE PRINT
THREADS ARE CLASS 2
CHAMFER ENDS OF ALL SCREW TREADS 30°
CUT ROUND, 1.5 THREAD RELIEF ON MACHINED THREADS
BREAK EDGES .016 MAX. ON MACHINED WORK
REMOVE BURRS, WELD SPLATTER & LOOSE SCALE
IN ACCORDANCE WITH ASME Y14.5M & B46.1

SHOP ORDERS
ACCT NO. / NO. REQD / SER NO. / DATE ISSD / DEL TO / DATE REQD
SURFACE TREATMT
IDENT METHOD TAG
PROJECT NUMBER N/A
PROJECT NAME N/A
DWG BY S.Bartlett DATE 23-Sep-02
CHK BY D.Oshatz DATE 23-Sep-02
APR BY D.Oshatz DATE 23-Sep-02

ERNEST ORLANDO LAWRENCE BERKELEY NATIONAL LABORATORY
UNIVERSITY OF CALIFORNIA - BERKELEY
LHC IR FEEDBOX
MAJOR ASSEMBLY
BUS DUCT ASSEMBLY

MICROFILMED: | DWG. TYPE ASSEM | SHOWN ON | SCALE: 0.150 | DO NOT SCALE PRINTS
PATENT CLEAR: | DESIGN ACCT. NO. Z5LCE2 | CATEGORY CODE LH2001 | DWG. NO. 2518646 | SIZE A | REV. A
SHEET 1 OF 1

DWG. NO. 2518646 SIZE A REV. A SH. 1

Officially Released to the LBNL Document Control Center
Released: October 2nd, 2002 DCC Auth Key: SJ5OBQITU0
Downloaded by: Daniel Pulsifer at April 09, 2007 10:57:43