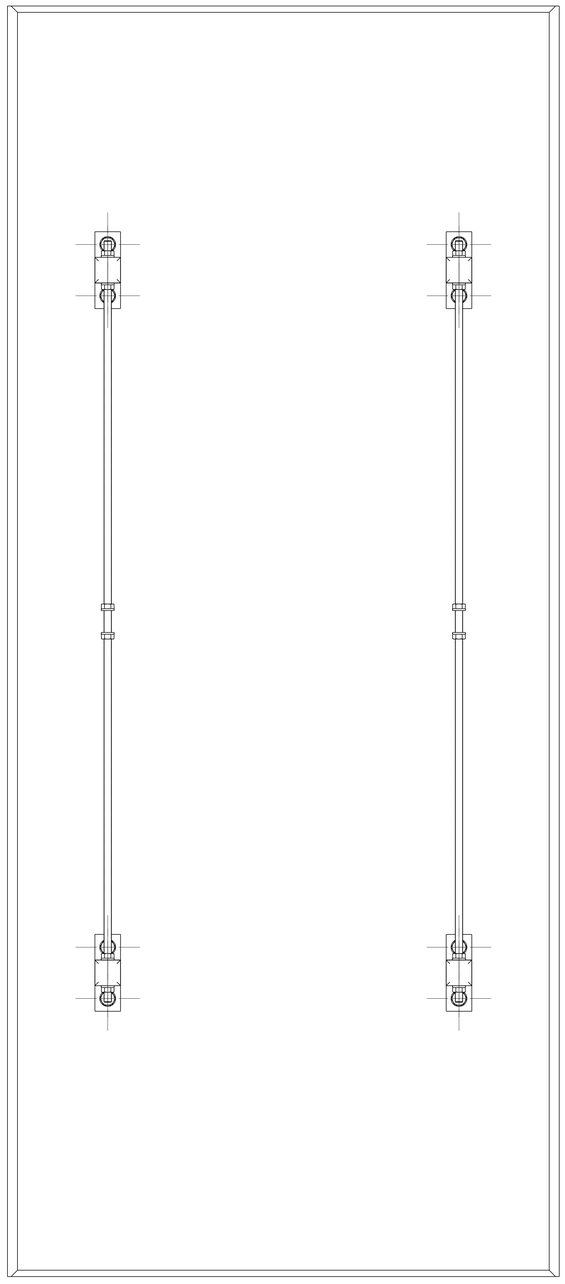

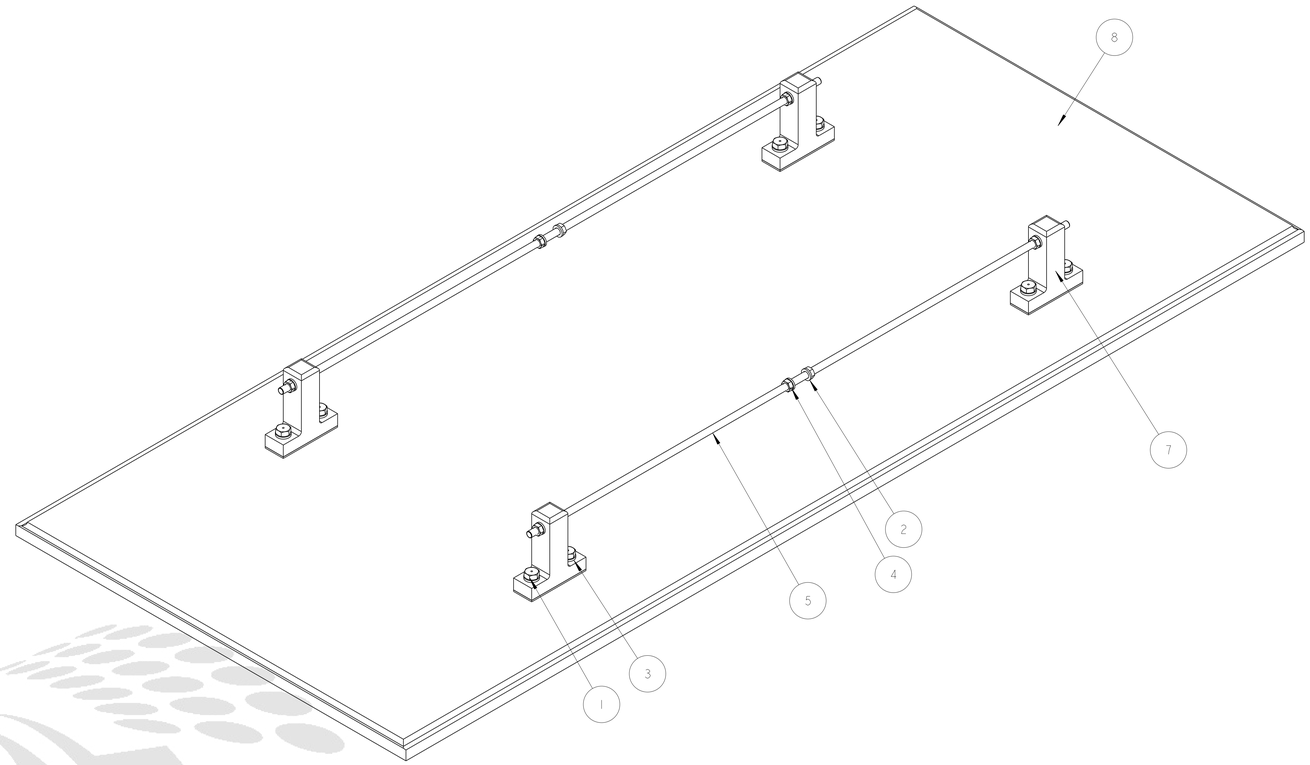


SCALE 1/4

NOTES: (UNLESS OTHERWISE SPECIFIED)

1. THIS IS A CRYOGENIC VACUUM COMPONENT.
2. CLEANING PROCEDURE : PER VENDOR SPECIFICATION WITH LBNL APPROVAL.
3. PACKAGING AND STORAGE PROCEDURE OF THE COMPONENTS: PER VENDOR SPECIFICATION WITH LBNL APPROVAL.
4. DIMENSIONS AND TOLERANCING PER ANSI Y14.5M-1982. UNITS ARE IN INCHES [mm] UNLESS OTHERWISE SPECIFIED.
5. USE OF SULFUR OR SILICONE BEARING OILS, LUBRICANTS, OR COOLANTS ARE STRICTLY PROHIBITED.
6. USE OF RESIN OR RUBBER BONDED ABRASIVES UNDER POWER IS STRICTLY PROHIBITED. USE VITREOUS BONDED ABRASIVES ONLY.
7. ESTIMATED WEIGHT: 1,196 lbs.

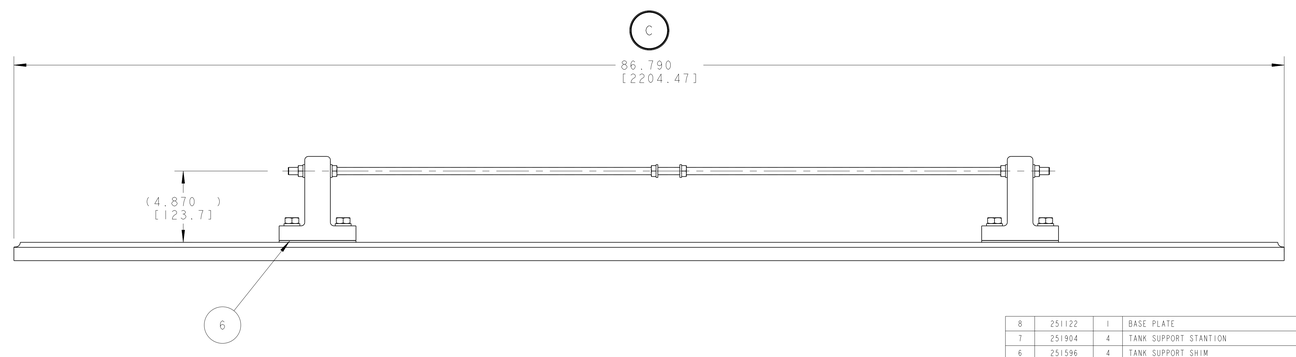


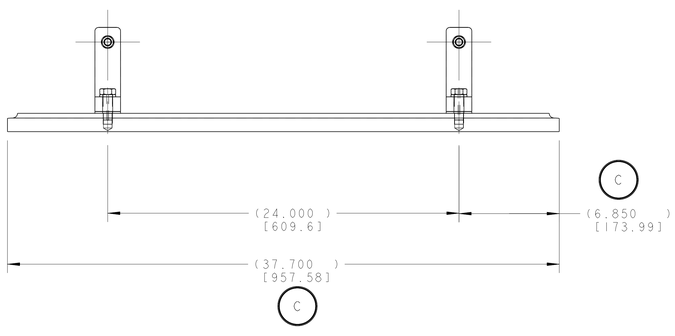


| ITEM | PART NO | REQD | DESCRIPTION | MATERIAL |
|---|---|---|---|---|
| 8 | 251122 | 1 | BASE PLATE | SS 304L |
| 7 | 251904 | 4 | TANK SUPPORT STANTION | SS 304L |
| 6 | 251596 | 4 | TANK SUPPORT SHIM | NEMA-G10 |
| 5 | 251901 | 2 | TANK SUPPORT ROD | INVAR |
| 4 | - | 12 | 1/2" HEX NUT | 18-8SS |
| 3 | - | 8 | 5/8" WASHER | 18-8SS |
| 2 | - | 12 | 1/2" WASHER | 18-8SS |
| 1 | - | 8 | M16 x1 X 45mm LG. HX HD CAP SCREW | 18-8SS |

| REV | DWG | CHK | ZONE | DATE | CHANGES |
|---|---|---|---|---|---|
| C | RLM | JPZ | | 9/9/03 | CHANGED BASE PLATE DETAIL; (6.850) WAS (7.350) (37.700) WAS (38.700); (86.790) WAS (88.290) |
| B | ARH | SPV | | 01/27/03 | REVISED BOM MATERIAL FOR ITEMS 1, 2, 3 & 4 |
| A | ARH | DPO | | 09-14-02 | INITIAL RELEASE |

THIRD ANGLE PROJECTION

UNLESS OTHERWISE SPECIFIED
TOLERANCES: X.X ± 0.1 FRAC. ± 1/64; X.XX ± 0.03 Angles ± 1.00°; X.XXX ± 0.010 FINISH 125/ 1/64
DO NOT SCALE PRINT
THREADS ARE CLASS 2
CHAMFER ENDS OF ALL SCREW THREADS 30°
CUT ROUND, 1.5 THREAD RELIEF ON MACHINED THREADS
BREAK EDGES .016 MAX. ON MACHINED WORK
REMOVE BURRS, WELD SPLATTER & LOOSE SCALE
IN ACCORDANCE WITH ASME Y14.5M & B46.1

SHOP ORDERS
ACCT NO. | NO. REQD | SER NO. | DATE ISSD | DATE REQD
DEL TO | SURFACE TREATMT | IDENT METHOD TAG
PROJECT NUMBER N/A
PROJECT NAME N/A
DWG BY M. KNOLLS DATE 02-Apr-02
CHK BY OSHATZ DATE 14-Sep-02
APR BY OSHATZ DATE 14-Sep-02

ERNEST ORLANDO LAWRENCE BERKELEY NATIONAL LABORATORY
UNIVERSITY OF CALIFORNIA - BERKELEY
LHC IR FEEDBOX
VACUUM
BASE PLATE ASSY

MICROFILMED: | DWG. TYPE ASSEM | SHOWN ON | SCALE: 1/4 | DO NOT SCALE PRINTS
PATENT CLEAR: | DESIGN ACCT. NO. Z5LCE3 | CATEGORY CODE LH2002 | SHEET 1 OF 1
DWG. NO. 2518586 | SIZE C | REV. C

DWG. NO. 2518586 | SIZE C | REV. 1 | SH. 1

Officially Released to the LBNL Document Control Center
Released: October 1st, 2003 DCC Auth Key: 30BJB79G4H
Downloaded by: Daniel Pulsifer at April 09, 2007 10:57:43