DWG. NO.	SIZE	REV.	SH.
2517044	A	1	

ITEM	PART NO	REQD	DESCRIPTION	MATERIAL
5		62	3/8 NUT	
4	251701	3	BAFFLE SUPPORT COLUMN	NEMA G10
3	251337	1	BAFFLE TIE ROD	NEMA G10
2	251336	6	SKIRT	KAPTON 5000
1	251335	26	HTS BAFFLE PLATE	FR4/Cu CLAD BOTH SIDES

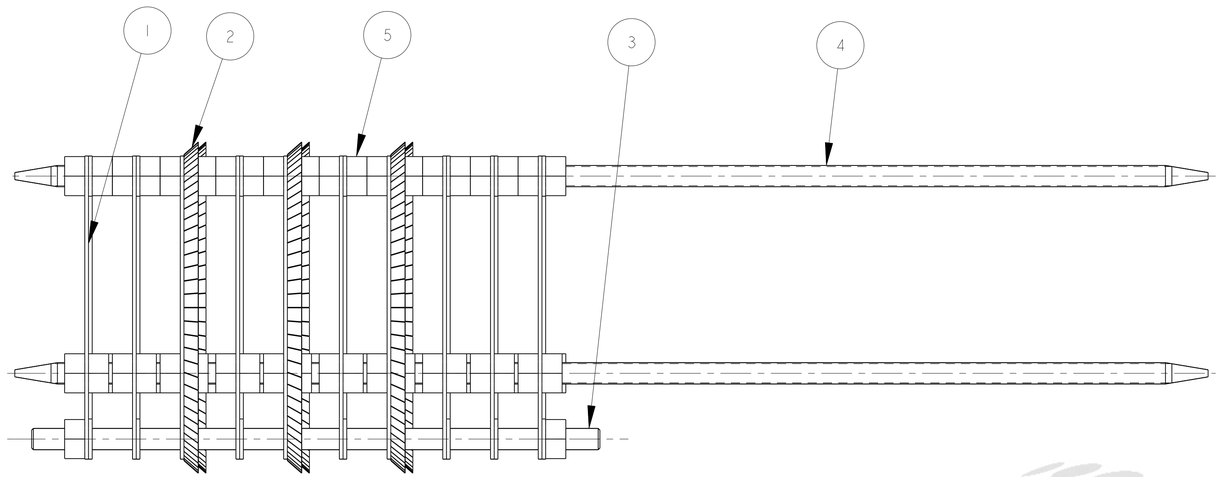

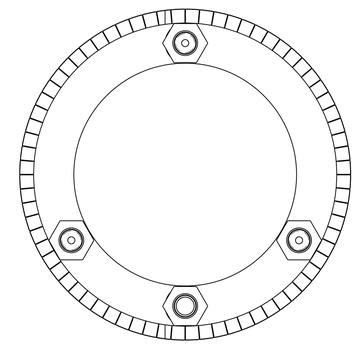

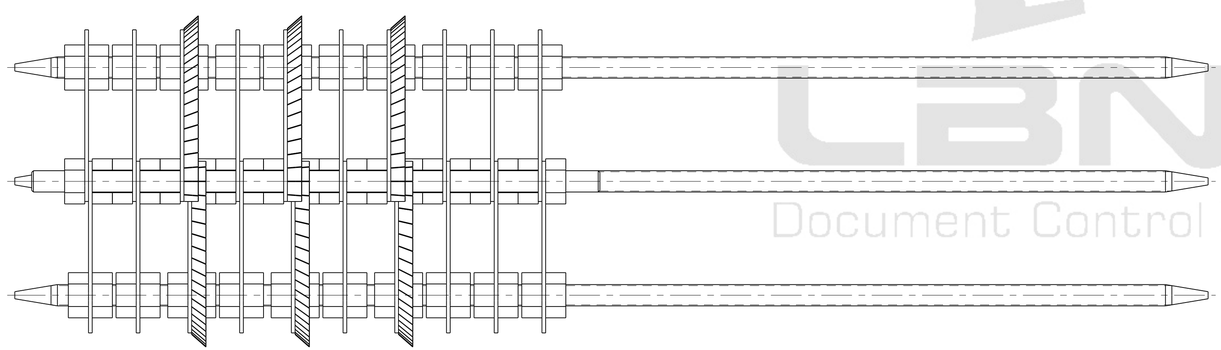

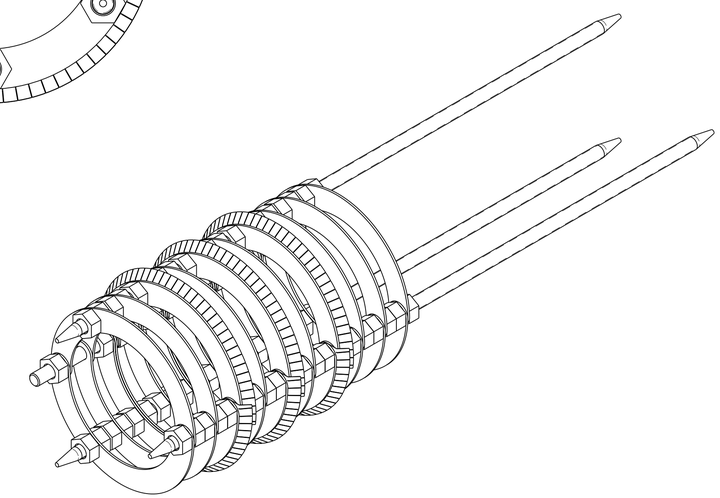

SCALE 1/2

NOTES: UNLESS OTHERWISE SPECIFIED,

1. DIMENSIONS AND TOLERANCING PER ANSI Y14.5M-1982
   UNITS ARE IN INCHES UNLESS OTHERWISE SPECIFIED.

3. ESTIMATED WEIGHT = 1.6 LBS

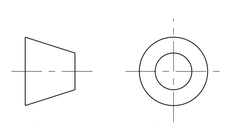

THIRD ANGLE PROJECTION

REV.	DWG	CHK	ZONE	DATE	CHANGES
A	MJK	DPO		9/19/02	INITIAL RELEASE

UNLESS OTHERWISE SPECIFIED

TOLERANCES: X.X ± 0.1 FRAC. ± 1/64; X.XX ± 0.03 Angles ± 1.00°; X.XXX ± 0.010 FINISH 125 √(μin)

DO NOT SCALE PRINT

THREADS ARE CLASS 2
CHAMFER ENDS OF ALL SCREW TREADS 30°
CUT ROUND, 1.5 THREAD RELIEF ON MACHINED THREADS
BREAK EDGES .016 MAX. ON MACHINED WORK
REMOVE BURRS, WELD SPLATTER & LOOSE SCALE
IN ACCORDANCE WITH ASME Y14.5M & B46.1

SHOP ORDERS

SER NO.	-		
ACCT NO.	NO. REQD	DATE ISSD	-
DEL TO		DATE REQD	-
SURFACE TREATMT	-		
IDENT METHOD	TAG		
PROJECT NUMBER	N/A		
PROJECT NAME	N/A		
DWG BY	A. ZACHOSZCZ	DATE	25-Oct-01
CHK BY	Jon Zbasnik	DATE	4/2/02
APR BY	Jon Zbasnik	DATE	4/2/02

ERNEST ORLANDO LAWRENCE
BERKELEY NATIONAL LABORATORY
UNIVERSITY OF CALIFORNIA - BERKELEY

LHC IR FEEDBOX
VACUUM
HTS LEAD BAFFLE ASSEMBLY

MICROFILMED:	DWG. TYPE	SHOWN ON	SCALE: 3/4	DO NOT SCALE PRINTS
	ASSEM	-	SHEET 1 OF 1	
PATENT CLEAR:	DESIGN ACCT. NO.	CATEGORY CODE	DWG. NO.	SIZE / REV.
	Z5LCE2	LH2002	2517044	A

Document Control Center

Officially Released to the LBNL Document Control Center
Released: October 1st, 2002 DCC Auth Key: 3U4YLHLZ15
Downloaded by: Daniel Pulsifer at April 09, 2007 10:57:42