DWG. NO.	SIZE	REV.	SH.
2516464	C	1	

ITEM	PART NO	REQD	DESCRIPTION	MATERIAL
2	-	1	SHEET, 1/16" THICK	COPPER, OFHC, C101
1	-	16	M5 CAPTIVE NUT, PEM AC-M5-1-SF	SS

NOTES: (UNLESS OTHERWISE SPECIFIED)

1. THIS IS A CRYOGENIC VACUUM COMPONENT.
2. WELDING PROCEDURE: PER VENDOR SPECIFICATION WITH LBNL APPROVAL.
3. CLEANING PROCEDURE : PER VENDOR SPECIFICATION WITH LBNL APPROVAL.
4. PACKAGING AND STORAGE PROCEDURE OF THE COMPONENTS: PER VENDOR SPECIFICATION WITH LBNL APPROVAL.
5. DIMENSIONS AND TOLERANCING PER ANSI Y14.5M-1982. UNITS ARE IN INCHES [mm] UNLESS OTHERWISE SPECIFIED.
6. USE OF SULFUR OR SILICONE BEARING OILS, LUBRICANTS, OR COOLANTS ARE STRICTLY PROHIBITED.
7. USE OF RESIN OR RUBBER BONDED ABRASIVES UNDER POWER IS STRICTLY PROHIBITED. USE VITREOUS BONDED ABRASIVES ONLY.

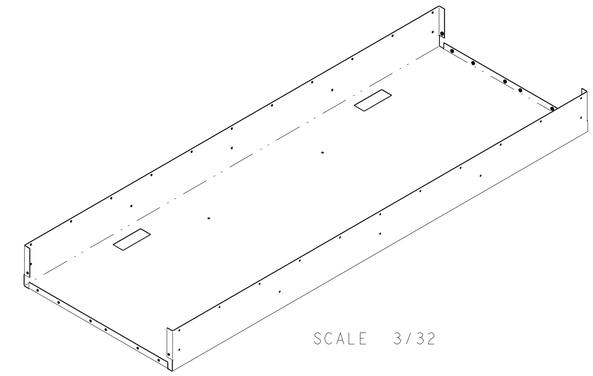

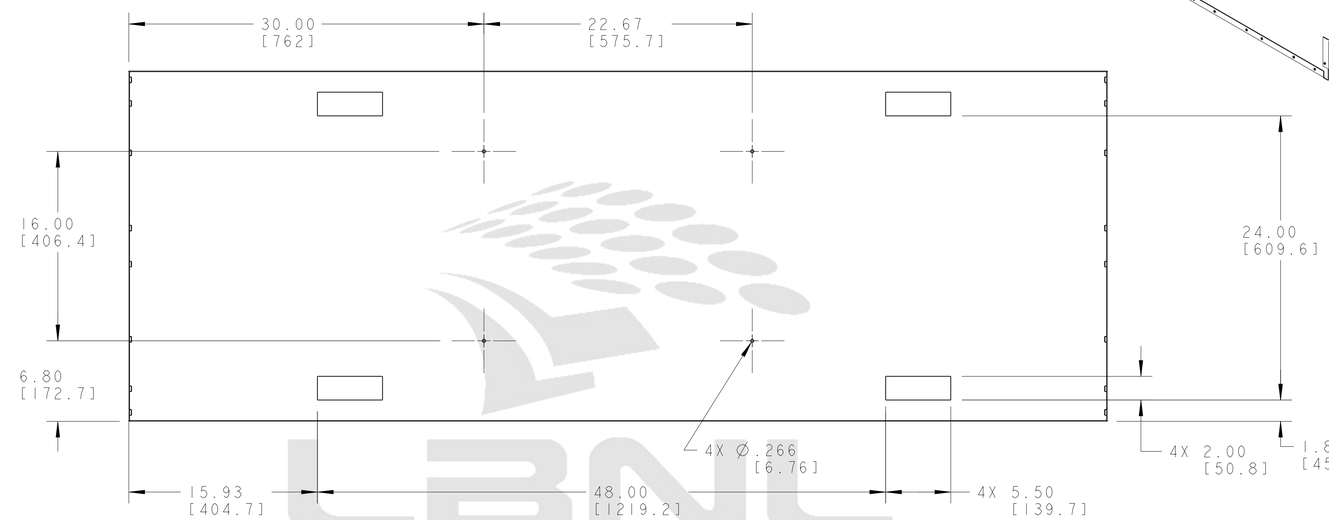

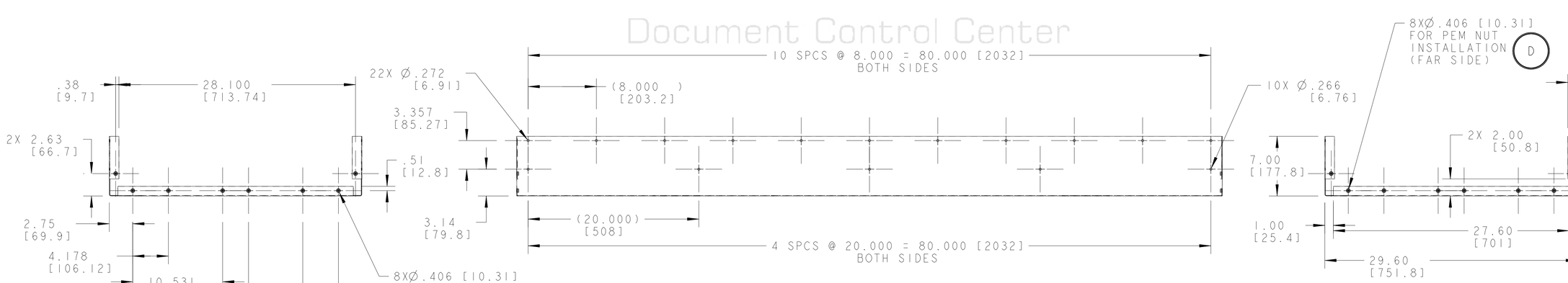

THIRD ANGLE PROJECTION

REV	DWG	CHK	ZONE	DATE	CHANGES
C	RLM	JPZ		10/16/03	ADD HOLE DIM FOR PEM NUT INSTALLATION
B	ARH	DPO		03/06/03	MINOR COSMETIC DRAWING CHANGES
A	ARH	DPO		9/12/02	INITIAL RELEASE

UNLESS OTHERWISE SPECIFIED
TOLERANCES: X.X ± 0.1 FRAC. ± 1/64; X.XX ± 0.03 Angles ± 1.00°; X.XXX ± 0.010 FINISH 125 √ (Typical)
DO NOT SCALE PRINT
THREADS ARE CLASS 2
CHAMFER ENDS OF ALL SCREW THREADS 30°
CUT ROUND, 1.5 THREAD RELIEF ON MACHINED THREADS
BREAK EDGES .016 MAX. ON MACHINED WORK
REMOVE BURRS, WELD SPLATTER & LOOSE SCALE
IN ACCORDANCE WITH ASME Y14.5M & B46.1

SHOP ORDERS
ACCT NO. | NO. REQD | DEL TO | SURFACE TREATMT - | IDENT METHOD TAG | PROJECT NUMBER N/A | PROJECT NAME N/A
SER. NO. - | DATE ISSD - | DATE REQD -
DWG BY KNOLLS DATE 28-Aug-02
CHK BY Jon Zbasnik DATE 12-Sep-02
APR BY Jon Zbasnik DATE 12-Sep-02

ERNEST ORLANDO LAWRENCE BERKELEY NATIONAL LABORATORY
UNIVERSITY OF CALIFORNIA - BERKELEY

LHC IR FEEDBOX
CRYOGENICS
THERMAL SHIELD, BOTTOM COVER

MICROFILMED: | DWG. TYPE ASSEM | SHOWN ON 251079 | SCALE: 5/32 | DO NOT SCALE PRINTS
SHEET 1 OF 2
PATENT CLEAR: | DESIGN ACCT. NO. Z5LCE2 | CATEGORY CODE LH2003 | DWG. NO. 2516464 | SIZE C | REV.

Officially Released to the LBNL Document Control Center
Released: October 28th, 2003 DCC Auth Key: KN9OF6XEN8
Downloaded by: Daniel Pulsifer at April 09, 2007 10:57:41

DWG. NO.	SIZE	REV.	SH.
2516464	C		2

SCALE 1/4

LBNL
Document Control Center

ERNEST ORLANDO LAWRENCE
BERKELEY NATIONAL LABORATORY
UNIVERSITY OF CALIFORNIA - BERKELEY

LHC IR FEEDBOX
CRYOGENICS
THERMAL SHIELD, BOTTOM COVER

MICROFILMED:	DWG. TYPE	SHOWN ON	SCALE: ~3/32	DO NOT SCALE PRINTS
	ASSEM	251079	SHEET 2 OF 2	
PATENT CLEAR:	DESIGN ACCT. NO.	CATEGORY CODE	DWG. NO.	SIZE / REV.
	Z5LCE2	LH2003	2516464	C

Officially Released to the LBNL Document Control Center
Released: October 28th, 2003 DCC Auth Key: KN9OF6XEN8
Downloaded by: Daniel Pulsifer at April 09, 2007 10:57:41