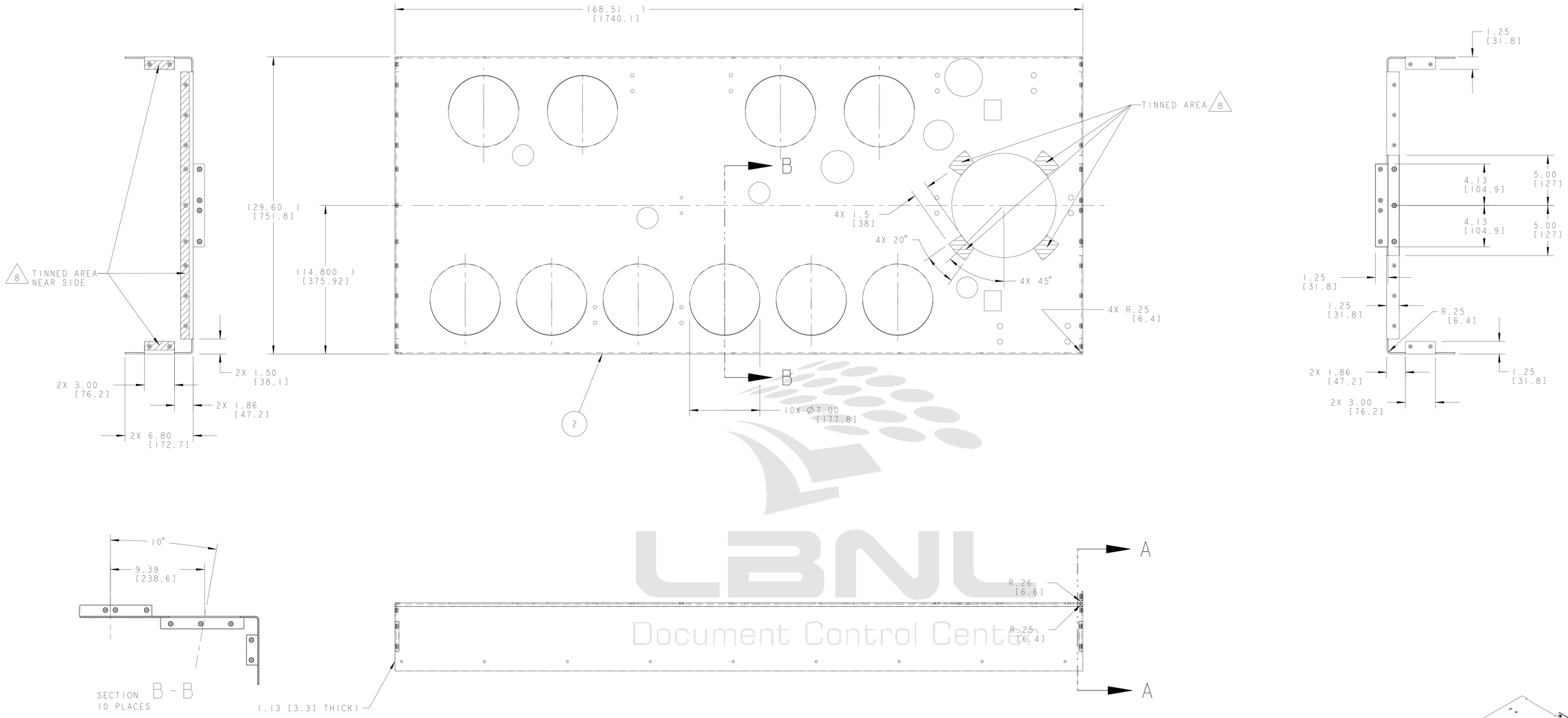

NOTES: (UNLESS OTHERWISE SPECIFIED)

1. THIS IS A CRYOGENIC VACUUM COMPONENT.
2. WELDING PROCEDURE: PER VENDOR SPECIFICATION WITH LBNL APPROVAL.
3. CLEANING PROCEDURE : PER VENDOR SPECIFICATION WITH LBNL APPROVAL.
4. PACKAGING AND STORAGE PROCEDURE OF THE COMPONENTS: PER VENDOR SPECIFICATION WITH LBNL APPROVAL.
5. DIMENSIONS AND TOLERANCING PER ANSI Y14.5M-1982. UNITS ARE IN INCHES [mm] UNLESS OTHERWISE SPECIFIED.
6. USE OF SULFUR OR SILICONE BEARING OILS, LUBRICANTS, OR COOLANTS ARE STRICTLY PROHIBITED.
7. USE OF RESIN OR RUBBER BONDED ABRASIVES UNDER POWER IS STRICTLY PROHIBITED. USE VITREOUS BONDED ABRASIVES ONLY.
8. TIN NOTED AREAS WITH 60/40 Sn/Pb SOLDER, USE RESIN FLUX.

THIRD ANGLE PROJECTION

REV	DWG	CHK	ZONE	DATE	CHANGES
D	RLM	JPZ		10/16/03	Ø.406 WAS .272 FOR PEM NUT INSTALLATION
C	RLM	JPZ		8/20/03	Ø2.12 WAS Ø2.00
B	ARH	SPV		01/02/03	COSMETIC CHANGES TO DRAWING, ADDED DIMS TO VIEW, SHEET 3, DELETED 3RD ANGLE PROJECTION, SHEETS 2-4
A	ARH	DPO		9/19/02	INITIAL RELEASE

UNLESS OTHERWISE SPECIFIED

TOLERANCES		
	X.X ± 0.1	FRAC. ± 1/64
	X.XX ± 0.03	Angles ± 1.00°
	X.XXX ± 0.010	FINISH 125/

DO NOT SCALE PRINT

THREADS ARE CLASS 2
CHAMFER ENDS OF ALL SCREW THREADS 30°
CUT ROUND, 1.5 THREAD RELIEF ON MACHINED THREADS
BREAK EDGES .016 MAX. ON MACHINED WORK
REMOVE BURRS, WELD SPLATTER & LOOSE SCALE
IN ACCORDANCE WITH ASME Y14.5M & B46.1

ITEM	PART NO	REQD	DESCRIPTION	MATERIAL
3	-	27	M5 CAPTIVE NUT, PEM AC-M5-1-SF	SS
2	-	1	SHEET, .125 THICK	COPPER,OFHC, C101

SHOP ORDERS

ACCT NO.	NO. REQD	SER NO. -
DEL TO		DATE ISSD -
		DATE REQD -
SURFACE TREATMT -		
IDENT METHOD TAG		
PROJECT NUMBER N/A		
PROJECT NAME N/A		
DWG BY R. LA MANTIA		DATE 18-Feb-02
CHK BY Jon Zbasnik/S.Virostek		DATE 13-AUG-02
APR BY Jon Zbasnik/D.Oshatz		DATE 13-AUG-02

ERNEST ORLANDO LAWRENCE
BERKELEY NATIONAL LABORATORY
UNIVERSITY OF CALIFORNIA - BERKELEY

LHC IR FEEDBOX
CRYOGENICS
TOP COVER, NEGATIVE SD, DFBXC/DFBXG

MICROFILMED:	DWG. TYPE	SHOWN ON	SCALE: 1/4	DO NOT SCALE PRINTS
	ASSEM	24C3526	SHEET 1 OF 4	
PATENT CLEAR:	DESIGN ACCT. NO.	CATEGORY CODE	DWG. NO.	SIZE / REV.
	Z5LCE2	LH2003	2516256	D

DWG. NO. 2516256 SIZE D REV. 1 SH. 1

Officially Released to the LBNL Document Control Center
Released: October 28th, 2003 DCC Auth Key: 8QOUP7596X
Downloaded by: Daniel Pulsifer at April 09, 2007 10:57:41

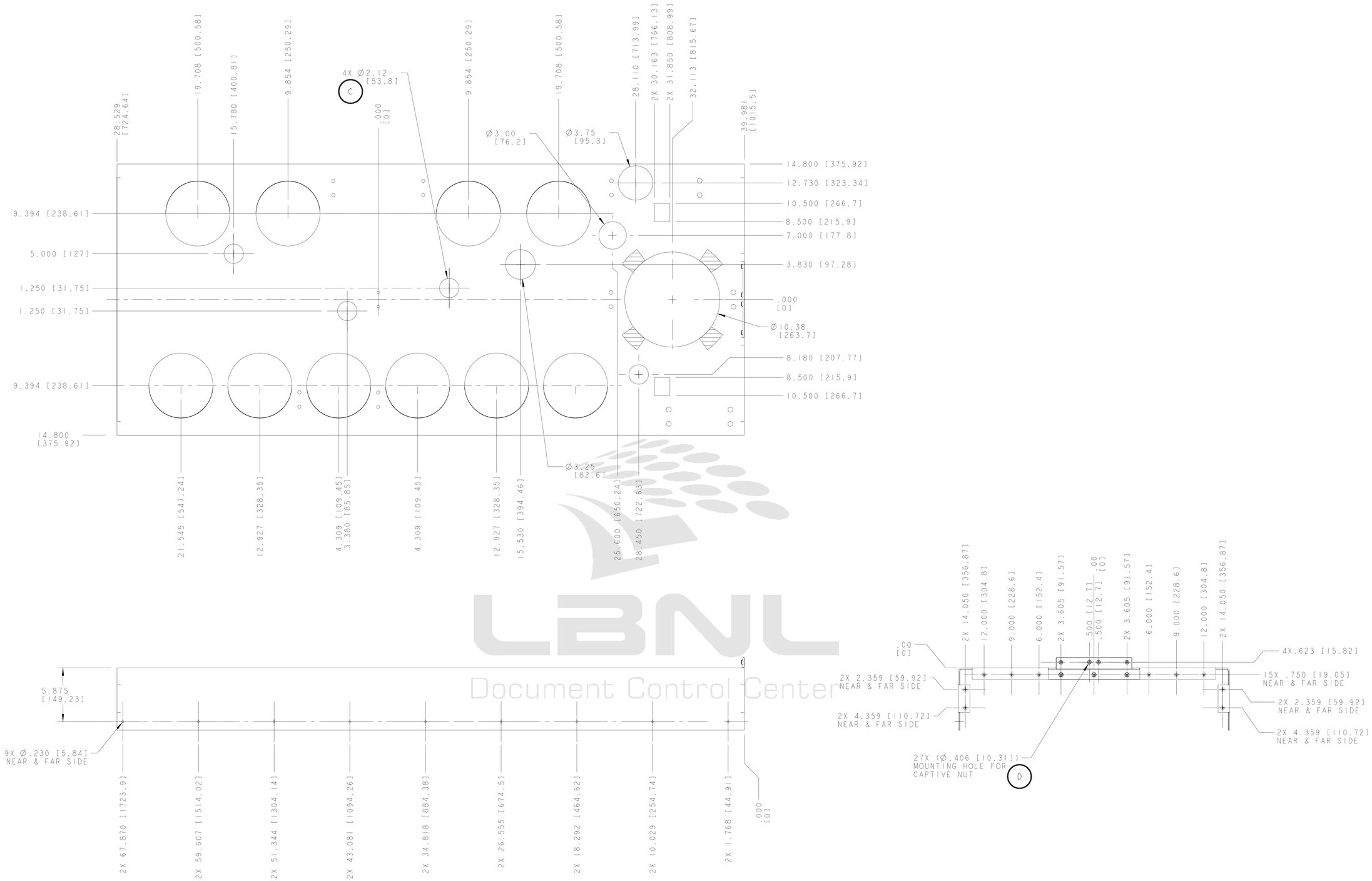

LBNL Document Control Center

ERNEST ORLANDO LAWRENCE BERKELEY NATIONAL LABORATORY
UNIVERSITY OF CALIFORNIA - BERKELEY

LHC IR FEEDBOX
CRYOGENICS
TOP COVER, NEGATIVE SD, DFBXC/DFBXG

MICROFILMED:	DWG. TYPE	SHOWN ON	SCALE: 1/4	DO NOT SCALE PRINTS
	ASSEM	24C3526	SHEET 2 OF 4	
PATENT CLEAR:	DESIGN ACCT. NO.	CATEGORY CODE	DWG. NO.	SIZE / REV.
	Z5LCE2	LH2003	2516256	D

DWG. NO. 2516256 SIZE D REV. 2

Officially Released to the LBNL Document Control Center
Released: October 28th, 2003 DCC Auth Key: 8QOUP7596X
Downloaded by: Daniel Pulsifer at April 09, 2007 10:57:41

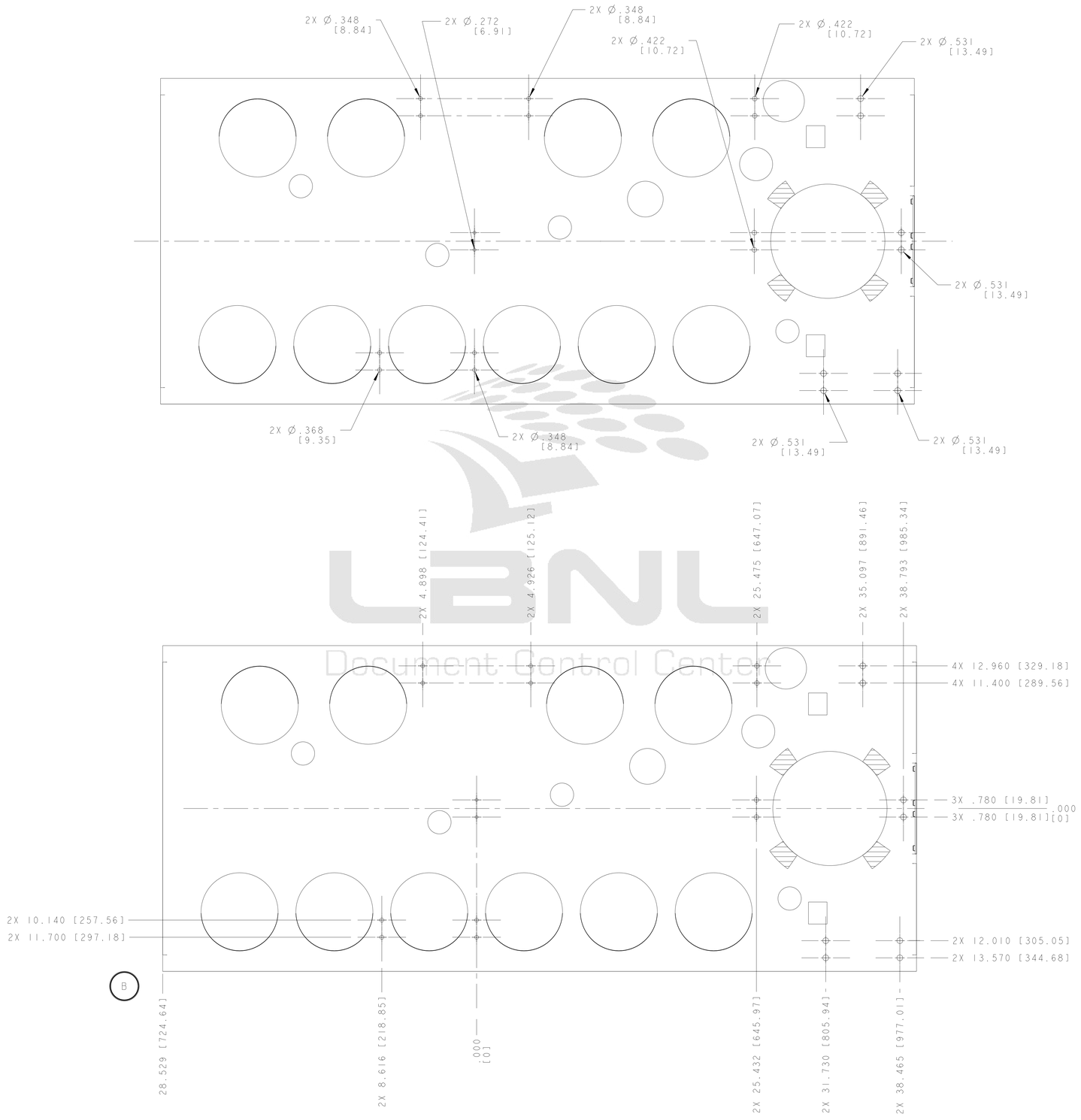

ERNEST ORLANDO LAWRENCE
BERKELEY NATIONAL LABORATORY
UNIVERSITY OF CALIFORNIA - BERKELEY

LHC IR FEEDBOX
CRYOGENICS
TOP COVER, NEGATIVE SD, DFBXC/DFBXG

MICROFILMED:	DWG. TYPE	SHOWN ON	SCALE: 1/4	DO NOT SCALE PRINTS
	ASSEM	24C3526	SHEET 3 OF 4	
PATENT CLEAR:	DESIGN ACCT. NO.	CATEGORY CODE	DWG. NO.	SIZE / REV.
	Z5LCE2	LH2003	2516256	D

DWG. NO. 2516256 SIZE D REV. 3

Officially Released to the LBNL Document Control Center
Released: October 28th, 2003 DCC Auth Key: 8QOUP7596X
Downloaded by: Daniel Pulsifer at April 09, 2007 10:57:41

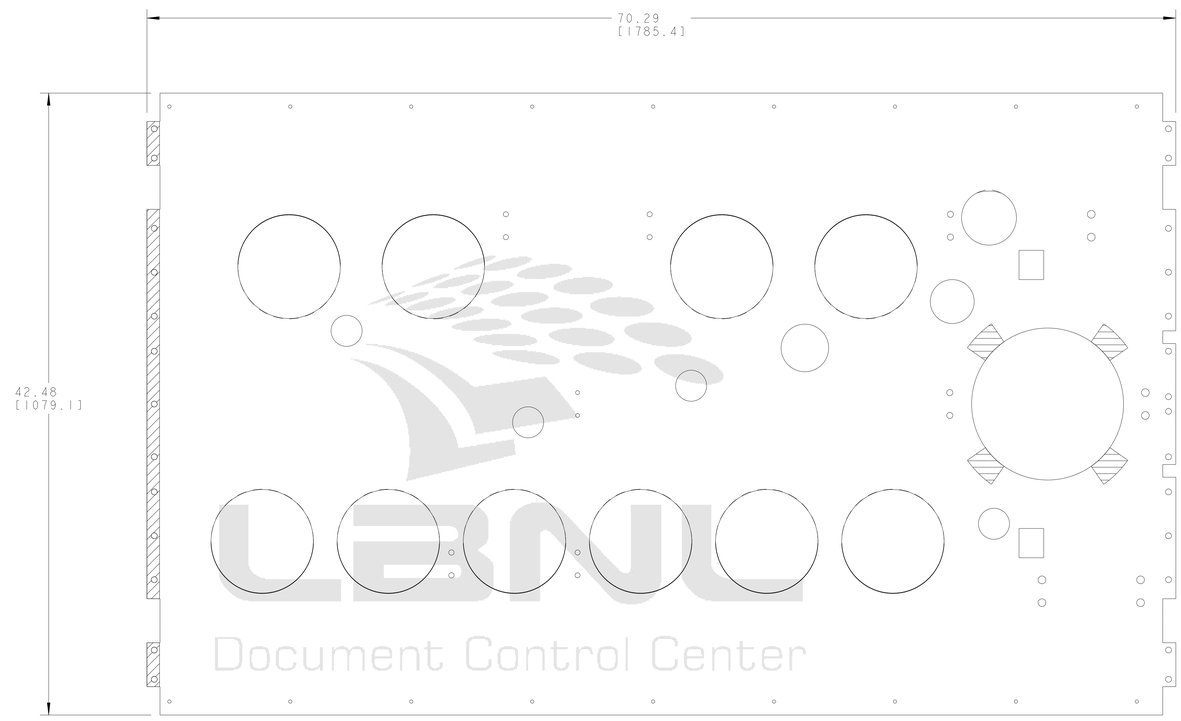

Document Control Center

FLAT PATTERN
SCALE 1/4

ERNEST ORLANDO LAWRENCE
BERKELEY NATIONAL LABORATORY
UNIVERSITY OF CALIFORNIA - BERKELEY

LHC IR FEEDBOX
CRYOGENICS
TOP COVER, NEGATIVE SD, DFBXC/DFBXG

MICROFILMED:	DWG. TYPE	SHOWN ON	SCALE: 1/4	DO NOT SCALE PRINTS
	ASSEM	24C3526	SHEET 4 OF 4	
PATENT CLEAR:	DESIGN ACCT. NO.	CATEGORY CODE	DWG. NO.	SIZE / REV.
	Z5LCE2	LH2003	2516256	D

DWG. NO. 2516256 SIZE/REV. D 4

Officially Released to the LBNL Document Control Center
Released: October 28th, 2003 DCC Auth Key: 8QOUP7596X
Downloaded by: Daniel Pulsifer at April 09, 2007 10:57:41