DWG. NO.	SIZE	REV.	SH.
2516004	B	1	

ITEM	PART NO	REQD	DESCRIPTION	MATERIAL
8	251601	1	CENTER PIPE SUPPORT	NEMA G-10
7	251598	4	SUPPORT BRACKET	SS
6	251597	1	TOP BRACKET PIPE SUPPORT	SS
5	-	14	WASHER, M6	SS 18-8
4	-	4	SCH, M6X1, 45LG, SILVER PLATED	SS 18-8
3	-	2	SCH, M6X1, 35LG, SILVER PLATED	SS 18-8
2	-	8	SCH, M6X1, 18LG., VENTED, SILVER PLATED	SS 18-8
1	-	6	NUT, M6	SS 18-8

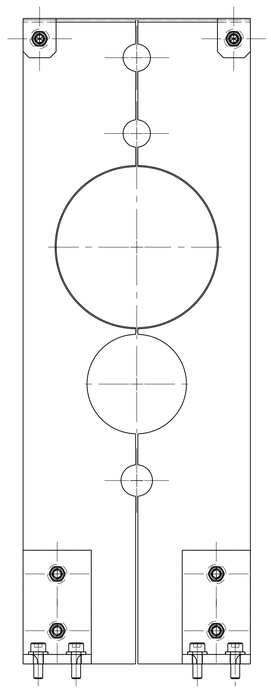

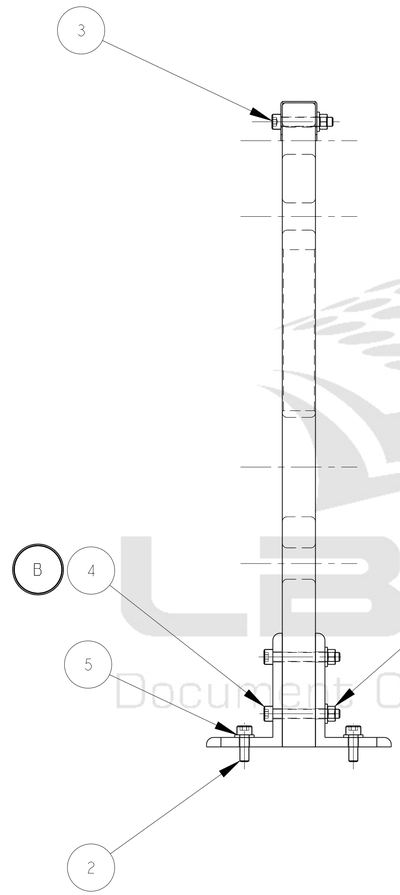

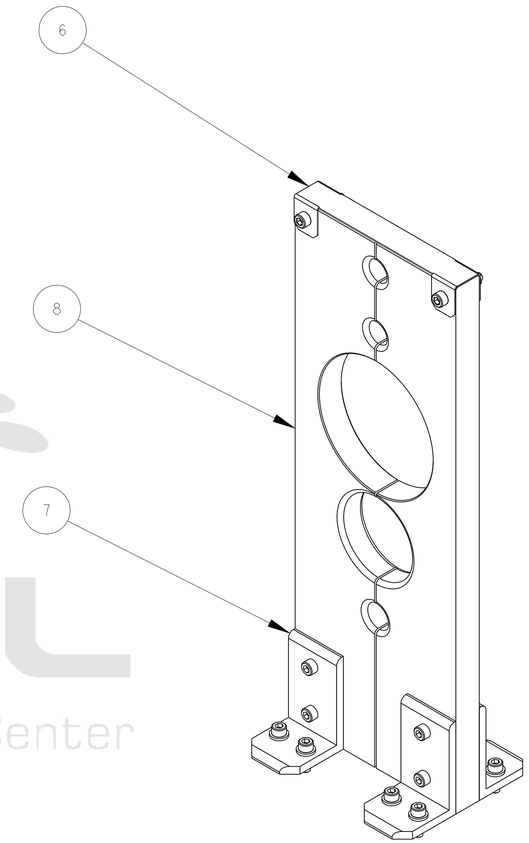

SCALE 1/2

NOTES: (UNLESS OTHERWISE SPECIFIED)

1. THIS IS A CRYOGENIC VACUUM COMPONENT.
2. CLEANING PROCEDURE : PER VENDOR SPECIFICATION WITH LBNL APPROVAL.
3. PACKAGING AND STORAGE PROCEDURE OF THE COMPONENTS: PER VENDOR SPCIFICATION WITH LBNL APPROVAL.
4. DIMENSIONS AND TOLERANCING PER ANSI Y14.5M-1982. UNITS ARE IN INCHES UNLESS OTHERWISE SPECIFIED.
5. USE OF SULFUR OR SILICONE BEARING OILS, LUBRICANTS, OR COOLANTS ARE STRICTLY PROHIBITED.
6. USE OF RESIN OR RUBBER BONDED ABRASIVES UNDER POWER IS STRICTLY PROHIBITED. USE VITREOUS BONDED ABRASIVES ONLY.

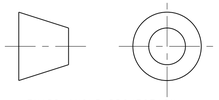

THIRD ANGLE PROJECTION

REV	DWG	CHK	ZONE	DATE	CHANGES
B	RLM	JPZ		6/23/03	45LG WAS 40LG
A	RLM	SPV		11-18-02	INITIAL RELEASE

UNLESS OTHERWISE SPECIFIED

TOLERANCES: X.X ± 0.1 | FRAC. ± 1/64 | X.XX ± 0.03 | Angles ± 1.00° | X.XXX ± 0.010 | FINISH 125 √ (Ra)

DO NOT SCALE PRINT

THREADS ARE CLASS 2
CHAMFER ENDS OF ALL SCREW TREADS 30°
CUT ROUND, 1.5 THREAD RELIEF ON MACHINED THREADS
BREAK EDGES .016 MAX. ON MACHINED WORK
REMOVE BURRS, WELD SPLATTER & LOOSE SCALE
IN ACCORDANCE WITH ASME Y14.5M & B46.1

SHOP ORDERS

ACCT NO.	NO. REQD	DATE ISSD	-
DEL TO		DATE REQD	-
SURFACE TREATMT	-		
IDENT METHOD	TAG		
PROJECT NUMBER	N/A		
PROJECT NAME	N/A		
DWG BY	R LA MANTIA	DATE	13-Nov-02
CHK BY	S VIROSTEK	DATE	18-Nov-02
APR BY	D OSHATZ	DATE	18-Nov-02

SER. NO. -

ERNEST ORLANDO LAWRENCE BERKELEY NATIONAL LABORATORY
UNIVERSITY OF CALIFORNIA - BERKELEY

LHC IR FEEDBOX
CRYOGENICS
SUPPORT, CENTER PIPE, DFBXA

MICROFILMED:	DWG. TYPE	SHOWN ON	SCALE: 1/2	DO NOT SCALE PRINTS
	ASSEM	251872	SHEET 1 OF 1	
PATENT CLEAR:	DESIGN ACCT. NO.	CATEGORY CODE	DWG. NO.	SIZE / REV.
	Z5LCE3	LH2003	2516004	B

Officially Released to the LBNL Document Control Center
Released: July 25th, 2003 DCC Auth Key: 5VR521HYLK
Downloaded by: Daniel Pulsifer at April 09, 2007 10:57:40