DWG. NO.	SIZE	REV.	SH.
2515864	B	1	

ITEM	PART NO	REQD	DESCRIPTION	MATERIAL
7	-	15	WASHER, M5	SS 18-8
6	-	44	RIVET, BLIND, 1/8", .313LG, McMASTER #97525A420	SS 18-8
5	-	15	SCH, M5X.8, 10LG, MCMSTR#91292A124	SS 18-8
4	25M939	1	RIVET STRIP KIT, QQSD, IP 5	CDA 101
3	251262	18	SPACER, QQS	NEMA G10
2	251588	1	CLAM SHELL 2, QQSD, IP 5	CDA 101
1	251587	1	CLAM SHELL 1, QQSD, IP 5	CDA 101

NOTES: (UNLESS OTHERWISE SPECIFIED)

1. THIS IS A CRYOGENIC VACUUM COMPONENT.
2. CLEANING PROCEDURE : PER VENDOR SPECIFICATION WITH LBNL APPROVAL.
3. PACKAGING AND STORAGE PROCEDURE OF THE COMPONENTS: PER VENDOR SPCIFICATION WITH LBNL APPROVAL.
4. DIMENSIONS AND TOLERANCING PER ANSI Y14.5M-1982. UNITS ARE IN INCHES UNLESS OTHERWISE SPECIFIED.
5. USE OF SULFUR OR SILICONE BEARING OILS, LUBRICANTS, OR COOLANTS ARE STRICTLY PROHIBITED.
6. USE OF RESIN OR RUBBER BONDED ABRASIVES UNDER POWER IS STRICTLY PROHIBITED. USE VITREOUS BONDED ABRASIVES ONLY.

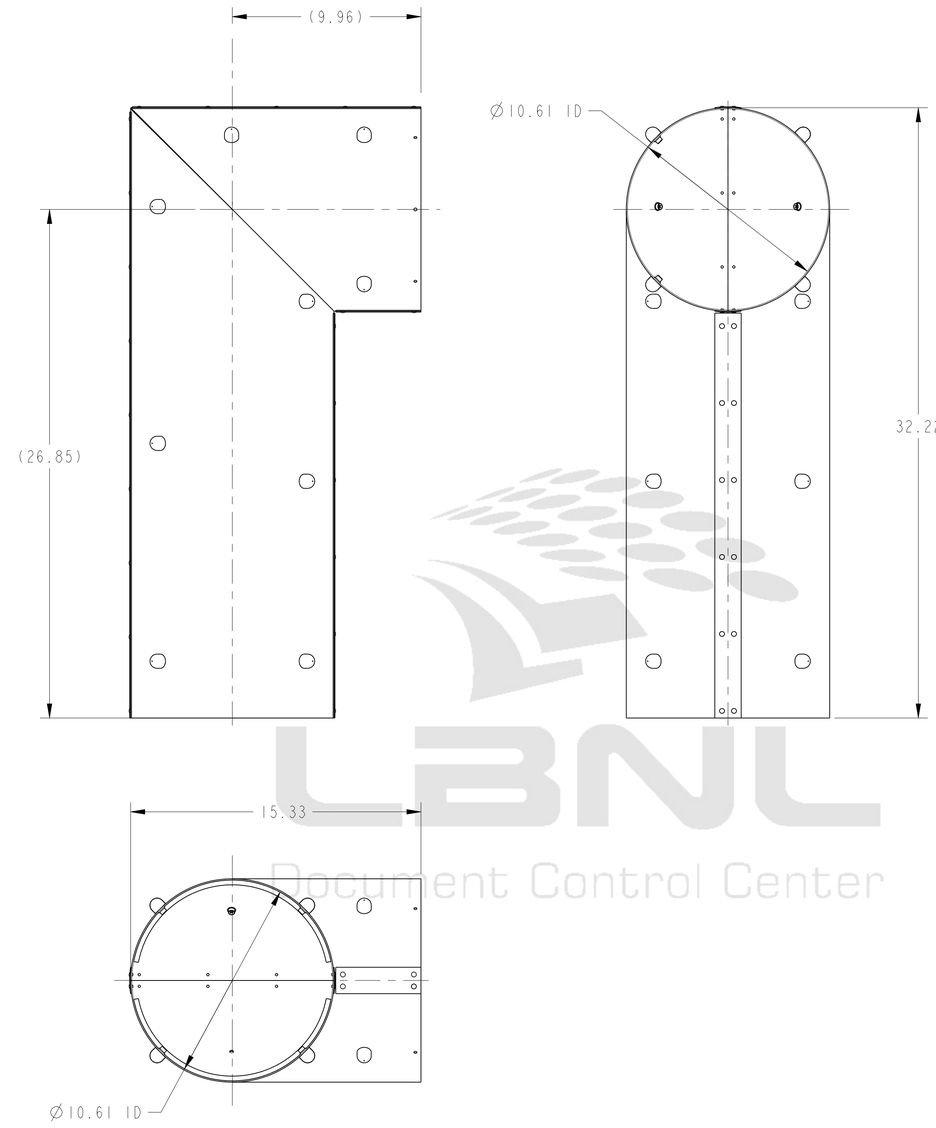

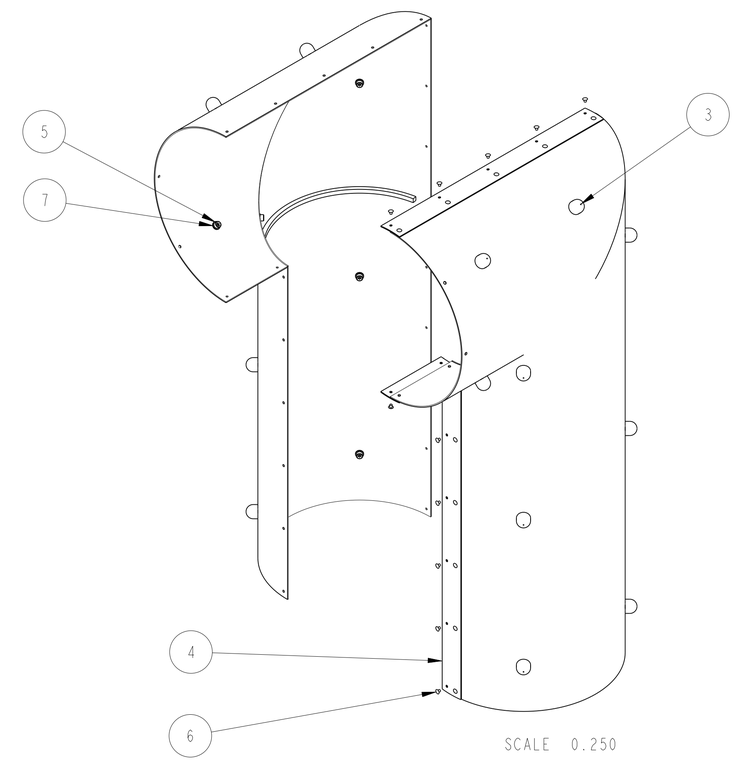

SHELL HALVES TO BE RIVETED TOGETHER AROUND PIPING AND SUPPORTS AT TOP ASSEMBLY LEVEL.

LBNL Document Control Center

THIRD ANGLE PROJECTION

REV	DWG	CHK	ZONE	DATE	CHANGES
B	RLM	JPZ		5/5/04	SIMPLIFY HEM DESIGN, ADD RIVET MOUNTING
A	RLM	DPO		10-4-02	INITIAL RELEASE

UNLESS OTHERWISE SPECIFIED
TOLERANCES: X.X ± 0.1 FRAC. ± 1/64; X.XX ± 0.03 Angles ± 1.00°; X.XXX ± 0.010 FINISH 125 √μin
DO NOT SCALE PRINT
THREADS ARE CLASS 2
CHAMFER ENDS OF ALL SCREW TREADS 30°
CUT ROUND, 1.5 THREAD RELIEF ON MACHINED THREADS
BREAK EDGES .016 MAX. ON MACHINED WORK
REMOVE BURRS, WELD SPLATTER & LOOSE SCALE
IN ACCORDANCE WITH ASME Y14.5M & B46.1

SHOP ORDERS
ACCT NO. / NO. REQD / DEL TO / SURFACE TREATMT - / IDENT METHOD TAG / PROJECT NUMBER N/A / PROJECT NAME N/A
DWG BY R LA MANTIA DATE 26-Feb-02
CHK BY Jon Zbasnik DATE 21-Apr-02
APR BY Jon Zbasnik DATE 21-Apr-02
SER NO. - / DATE ISSD - / DATE REQD -

ERNEST ORLANDO LAWRENCE BERKELEY NATIONAL LABORATORY
UNIVERSITY OF CALIFORNIA - BERKELEY

LHC IR FEEDBOX
VACUUM
THERMAL SHIELD JUMPER, QQSD, IP 5

MICROFILMED: / PATENT CLEAR: / DWG. TYPE ASSEM / SHOWN ON - / SCALE: 0.250 / DO NOT SCALE PRINTS / SHEET 1 OF 1
DESIGN ACCT. NO. Z5LCE2 / CATEGORY CODE LH2002 / DWG. NO. 2515864 / SIZE B / REV.

Officially Released to the LBNL Document Control Center
Released: May 5th, 2004 DCC Auth Key: 32ILBZ308Y
Downloaded by: Daniel Pulsifer at April 09, 2007 10:57:40