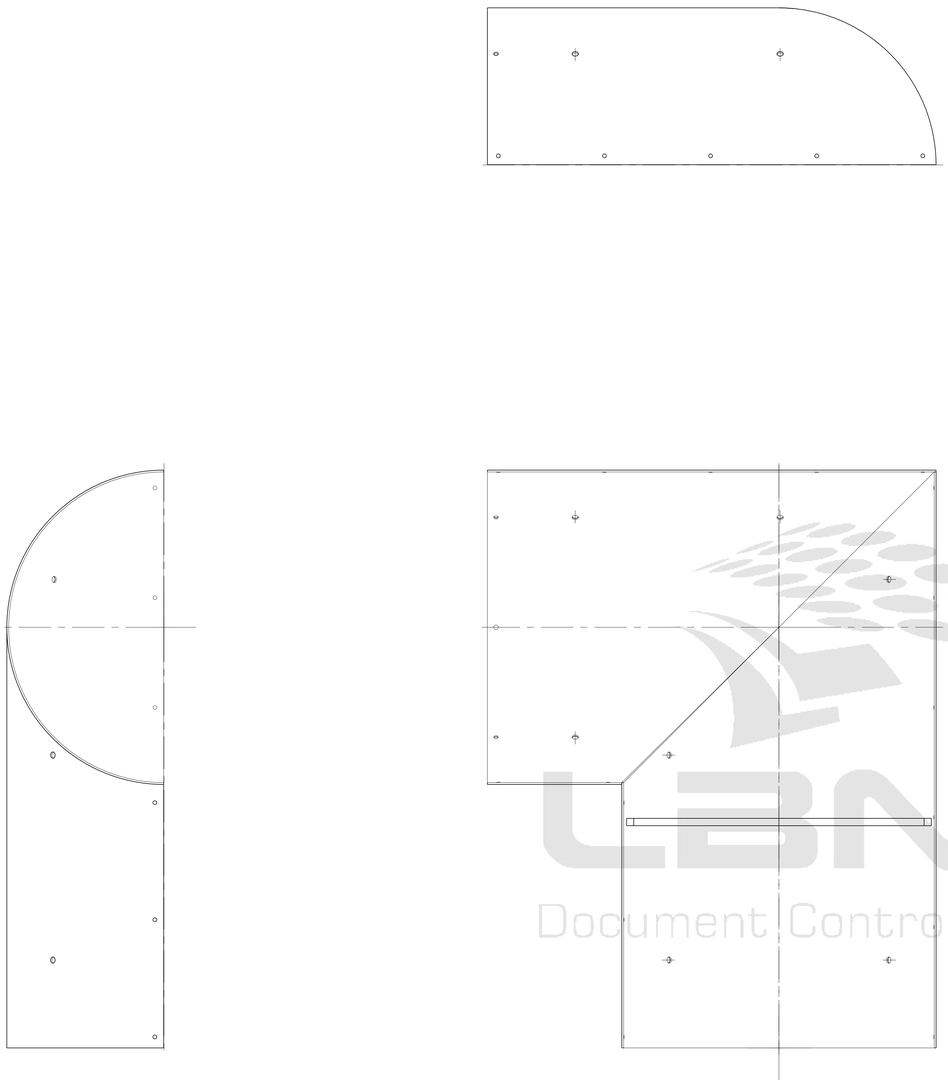

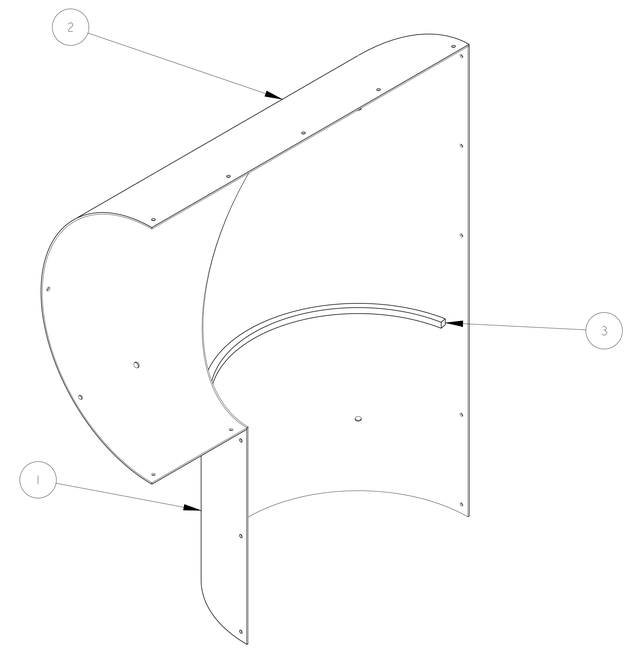

REFER TO OPPOSITE HAND
SIMILAR HALF 251584 FOR
DIMENSIONS, NOTES AND
INSTRUCTIONS.

LBNL
Document Control Center

ITEM	PART NO	REQD	DESCRIPTION	MATERIAL
3	25M915	1	RETAINING BAR	COPPER, OFHC, C101
2	-	1	COPPER SHEET, .063 THICK	COPPER, OFHC, C101
1	-	1	COPPER SHEET, .063 THICK	COPPER, OFHC, C101

REV	DWG	CHK	ZONE	DATE	CHANGES
D	RLM	JPZ		5/5/04	SEE 251584
C	RLM	JPZ		10/15/03	RELEASE TO PRINT ROOM
B	ARH	DPO		03/04/03	MINOR COSMETIC DRAWING CHANGES
A	RLM	DPO		10-4-02	INITIAL RELEASE

THIRD ANGLE PROJECTION

UNLESS OTHERWISE SPECIFIED
TOLERANCES: X.X ± 0.1 FRAC. ± 1/64; X.XX ± 0.03 Angles ± 1.00°; X.XXX ± 0.010 FINISH 125 μin
DO NOT SCALE PRINT
THREADS ARE CLASS 2
CHAMFER ENDS OF ALL SCREW THREADS 30°
CUT ROUND, 1.5 THREAD RELIEF ON MACHINED THREADS
BREAK EDGES .016 MAX. ON MACHINED WORK
REMOVE BURRS, WELD SPLATTER & LOOSE SCALE
IN ACCORDANCE WITH ASME Y14.5M & B46.1

SHOP ORDERS
ACCT NO. / NO. REQD / SER NO. / DATE ISSD / DEL TO / DATE REQD / SURFACE TREATMT / IDENT METHOD TAG / PROJECT NUMBER N/A / PROJECT NAME N/A
DWG BY R LA MANTIA DATE 28-Feb-02
CHK BY Jon Zbasnik DATE 21-Apr-02
APP BY Jon Zbasnik DATE 21-Apr-02

ERNEST ORLANDO LAWRENCE
BERKELEY NATIONAL LABORATORY
UNIVERSITY OF CALIFORNIA · BERKELEY

LHC IR FEEDBOX
VACUUM
CLAM SHELL 2, QOSC, IP 5

MICROFILMED: | DWG. TYPE ASSEM | SHOWN ON - | SCALE: 1/2 | DO NOT SCALE PRINTS
PATENT CLEAR: | DESIGN ACCT. NO. Z5LCE2 | CATEGORY CODE LH2002 | DWG. NO. 2515856 | TYPE D | REV.
SHEET 1 OF 1

DWG. NO. 2515856 SIZE D REV 1

Officially Released to the LBNL Document Control Center
Released: May 5th, 2004 DCC Auth Key: Q9UJRD1ILR
Downloaded by: Daniel Pulsifer at April 09, 2007 10:57:40