NOTES: (UNLESS OTHERWISE SPECIFIED)

1. THIS IS A CRYOGENIC VACUUM COMPONENT.
2. WELDING OR SOLDERING PROCEDURE: PER VENDOR SPECIFICATION WITH LBNL APPROVAL.
3. CLEANING PROCEDURE : PER VENDOR SPECIFICATION WITH LBNL APPROVAL.
4. PACKAGING AND STORAGE PROCEDURE OF THE COMPONENTS: PER VENDOR SPCIFICATION WITH LBNL APPROVAL.
5. DIMENSIONS AND TOLERANCING PER ANSI Y14.5M-1982. UNITS ARE IN INCHES UNLESS OTHERWISE SPECIFIED.
6. USE OF SULFUR OR SILICONE BEARING OILS, LUBRICANTS, OR COOLANTS ARE STRICTLY PROHIBITED.
7. USE OF RESIN OR RUBBER BONDED ABRASIVES UNDER POWER IS STRICTLY PROHIBITED. USE VITREOUS BONDED ABRASIVES ONLY.

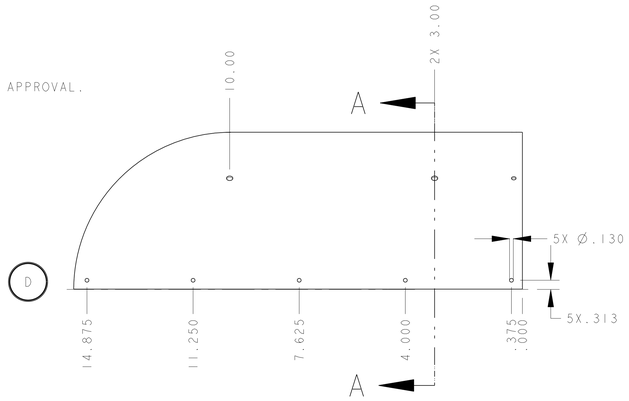

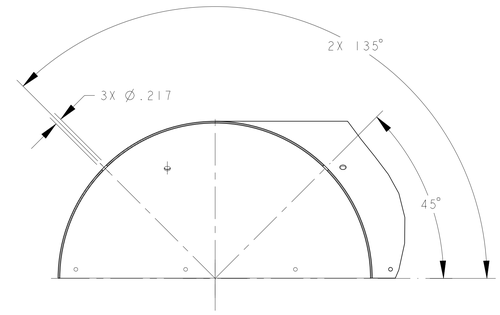

SECTION A - A

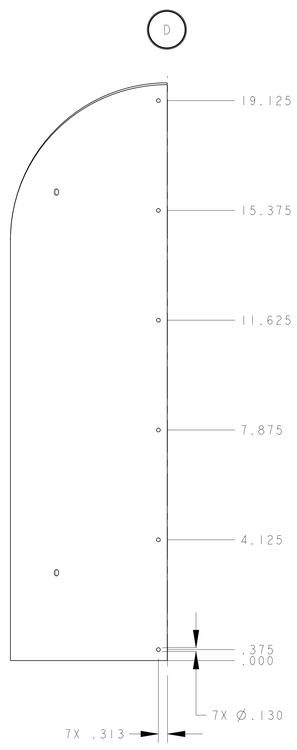

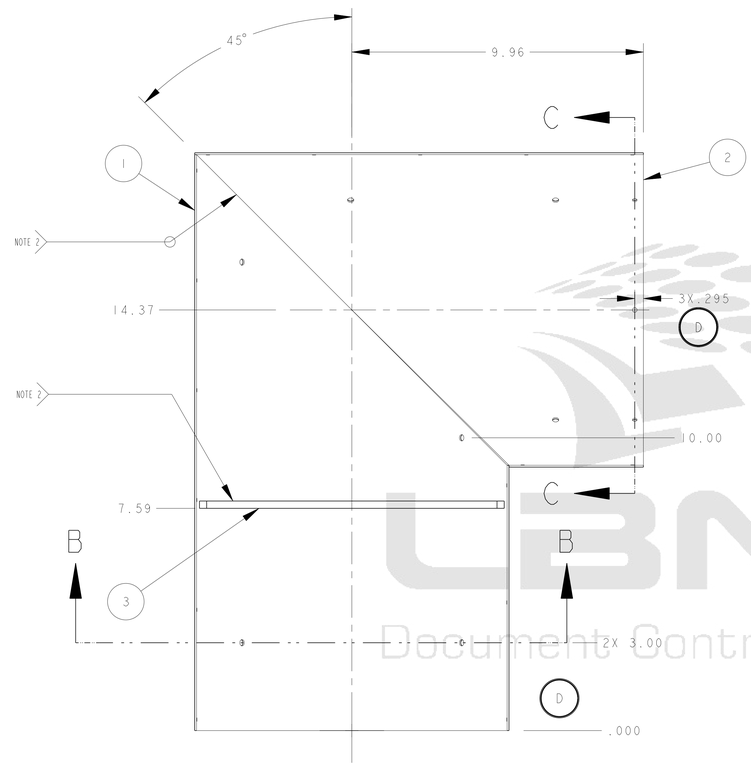

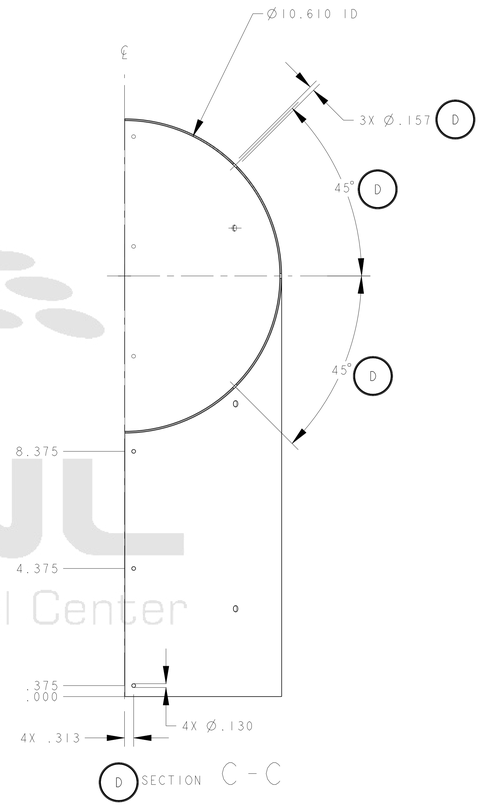

SECTION C - C

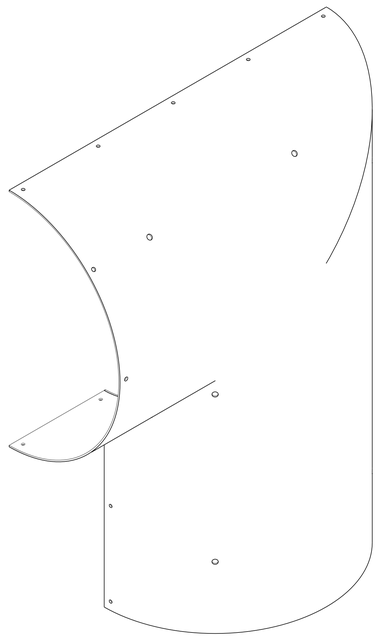

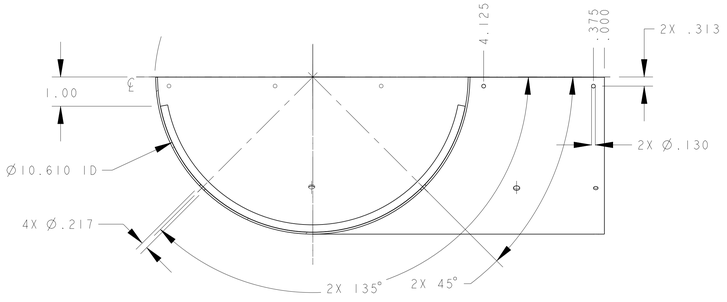

SECTION B - B

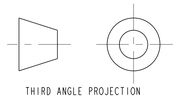

THIRD ANGLE PROJECTION

REV	DWG	CHK	ZONE	DATE	CHANGES
D	RLM	JPZ		5/5/04	SIMPLIFY HEM DESIGN, REMOVE TINNING, ADD HOLES FOR INTERFACE (SECTION C-C)
C	RLM	JPZ		10/15/03	RELEASE TO PRINT ROOM
B	ARH	DPO		03/04/03	MINOR COSMETIC DRAWING CHANGES
A	RLM	DPO		10-4-02	INITIAL RELEASE

UNLESS OTHERWISE SPECIFIED

TOLERANCES	
X.X ± 0.1	FRAC. ± 1/64
X.XX ± 0.03	Angles ± 1.0°
X.XXX ± 0.010	FINISH 125

DO NOT SCALE PRINT

THREADS ARE CLASS 2
CHAMFER ENDS OF ALL SCREW THREADS 30°
CUT ROUND, 1.5 THREAD RELIEF ON MACHINED THREADS
BREAK EDGES .016 MAX. ON MACHINED WORK
REMOVE BURRS, WELD SPLATTER & LOOSE SCALE
(IN ACCORDANCE WITH ASME Y14.5M & BAL)

ITEM	PART NO	REQD	DESCRIPTION	MATERIAL
3	25M815	1	RETAINING BAR	COPPER, OFHC, C101
2	-	1	COPPER SHEET, .063 THICK	COPPER, OFHC, C101
1	-	1	COPPER SHEET, .063 THICK	COPPER, OFHC, C101

SHOP ORDERS

ACCT NO.		NO REQD	DATE ISSD
REL TO			DATE REQD
SURFACE TREATMT			
IDENT METHOD	TAG		
PROJECT NUMBER	N/A		
PROJECT NAME	N/A		

DWN	R LA MANTIA	DATE 28-Feb-02
CHK	Jon Zbasnik	DATE 21-Apr-02
APR	Jon Zbasnik	DATE 21-Apr-02

SER NO

ERNEST ORLANDO LAWRENCE BERKELEY NATIONAL LABORATORY
UNIVERSITY OF CALIFORNIA · BERKELEY

LHC IR FEEDBOX
VACUUM
CLAM SHELL 1, QQSC, IP5

MICROFILMED:	DWG. TYPE	SHOWN ON	SCALE: 1/2	DO NOT SCALE PRINTS
	ASSEM	-	SHEET 1 OF 1	
PATENT CLEAR:	DESIGN ACCT. NO.	CATEGORY CODE	DWG. NO.	SIZE / REV
	Z5LCE2	LH2002	2515846	D

DWG. NO. 2515846 SIZE D REV 1 SH 1

Officially Released to the LBNL Document Control Center
Released: May 5th, 2004 DCC Auth Key: 9BUN01449Z
Downloaded by: Daniel Pulsifer at April 09, 2007 10:57:40