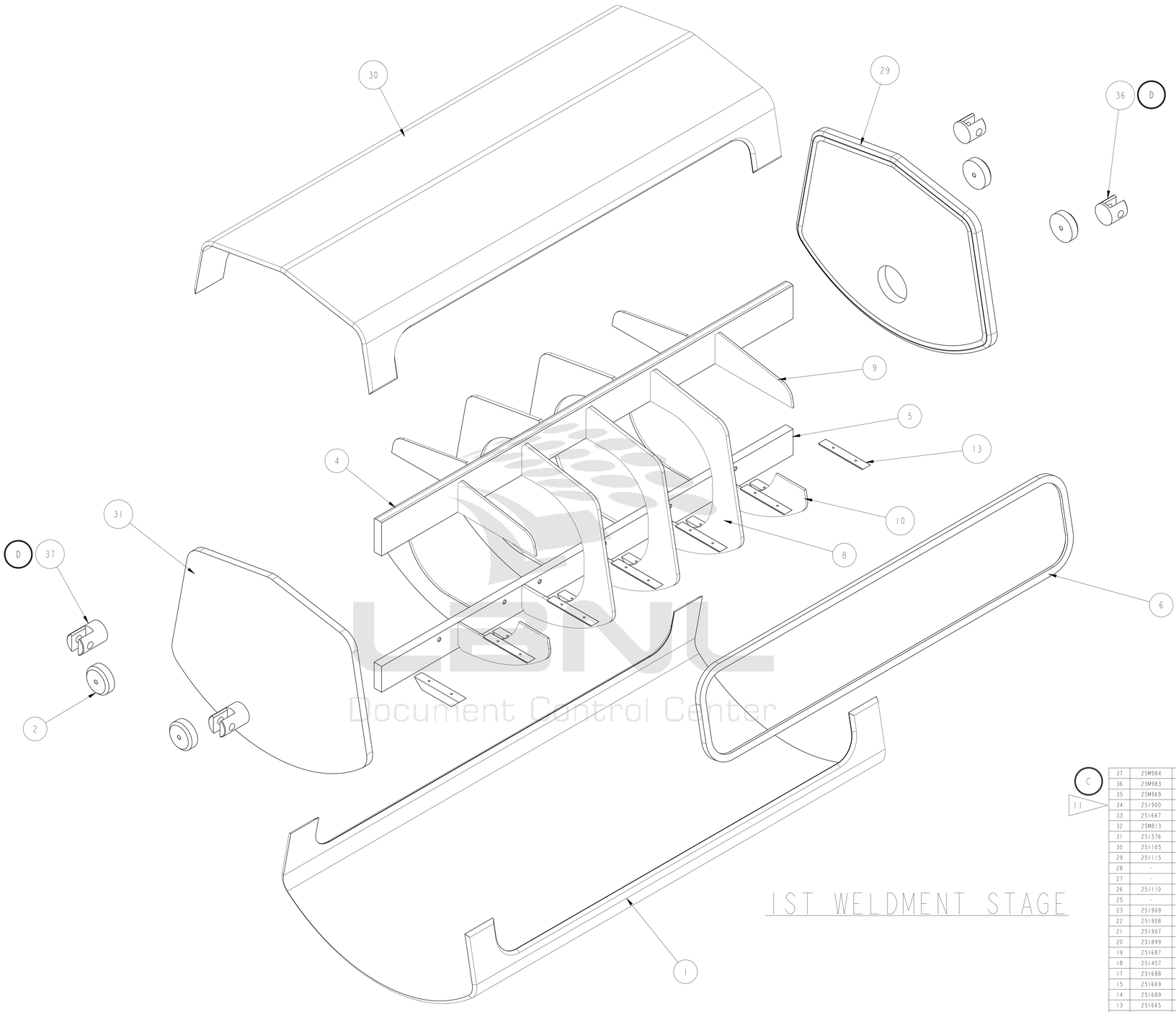

LBNL
Document Control Center

IST WELDMENT STAGE

NOTES: UNLESS OTHERWISE SPECIFIED,

1. DIMENSIONS AND TOLERANCING PER ANSI Y14.5M-1982 UNITS ARE IN INCHES UNLESS OTHERWISE SPECIFIED.
2. USE OF SULFUR OR SILICONE BEARING OILS, LUBRICANTS, OR COOLANTS ARE STRICTLY PROHIBITED
3. USE OF RESIN OR RUBBER BONDED ADRASIVES UNDER POWER IS STRICTLY PROHIBITED. USE VITREOUS BONDED ABRASIVES ONLY.
4. CLEAN AFTER MACHINING PER VENDOR SPECIFICATION; SUBJECT TO LBNL APPROVAL.
5. VENDOR SUGGESTED CHANGES TO WELD PREPS; SUBJECT TO LBNL APPROVAL.
6. PROTECT FINISHED PART BY BAGGING OR SIMILAR METHOD TO PROTECT AND MAINTAIN CLEANLINESS DURING SHIPMENT AND STORAGE.
7. VENDOR SUGGESTED CHANGES TO TOLERANCES TO FACILITATE ASSEMBLY; SUBJECT TO LBNL APPROVAL
8. OPERATING CONDITIONS, 4.2k, 70 psig (4.4bar) TEST PRESSURE.
9. ESTIMATED WEIGHT: 768 LBS.
10. TACK WELD APPROPRIATE WELD BACKING STRIPS AROUND ENTIRE PERIMETER OF VESSEL OPENING. COVER SHOWN IN DRAWING 25M8026 WILL BE WELDED INTO OPENING DURING A LATER STEP PER DRAWING 24C3526.
11. TOOLING ITEM NOT SHOWN

THIRD ANGLE PROJECTION

ITEM	PART NO	REQD	DESCRIPTION	MATERIAL
37	25M984	2	BOSS, LHe TANK, D1 SIDE	SS 304L
36	25M983	2	BOSS, LHe TANK, Q3 SIDE	SS 304L
35	25M969	1	THERMOMETER MOUNTING PAD	CDA 10100
34	251900	2	TANK SUPPORT BRACKET	SS 304L
33	251667	1	PUSH BLOCK	ALUM 6061
32	25M813	1	CLAMP COVER 1"	OFHC, C101
31	251576	1	LIQUID HELIUM TANK, END PLATE	304L SS
30	251105	1	LIQUID HELIUM TANK, UPPER SHELL	304L SS
29	251115	1	LIQUID HELIUM TANK, END PLATE (1 PORT)	304L SS
28	-	4	SCH, M5X.8, 12LG, SILVER PLATED	SS 18-8
27	-	4	LOCK WASHER, M5	SS
26	251110	8	LIQUID HELIUM TANK, WELDMENT RING	304L SS
25	-	1	COPPER BRAID, 1" X 1/8"	-
23	251909	1	LIQUID HELIUM PORT STUB	304L SS
22	251908	1	CHECK VALVE STUB	304L SS
21	251907	1	RELIEF PORT PIPE STUB	304L SS
20	251899	2	PIPING SUPPORT PAD	SS 304L
19	251687	1	CABLE LOOM BASE-B ASSEMBLY	-
18	251457	2	HTS SOLDER ASSEMBLY-8A	-
17	251688	2	CABLE LOOM BASE ASSEMBLY	-
15	251669	2	HTS SOLDER JOINT ASSEMBLY-8	-
14	251689	3	CABLE LOOM BASE-A ASSEMBLY	-
13	251665	12	SOLDER BOX GUSSET	SS
12	25M900	1	CLAMP BASE PLATE	CDA 101
10	251109	4	LIQUID HELIUM TANK, HALF RIB, LOWER	304L SS
9	251108	4	LIQUID HELIUM TANK , UPPER HALF RIB	SS 304L
8	251107	5	LIQUID HELIUM TANK, FULL RIB	SS 304L
6	251104	1	LIQUID HELIUM TANK, PORT FRAME	SS 304L
5	251103	1	LIQUID HELIUM TANK, HORIZONTAL LOWER RIB	SS 304L
4	251102	1	LIQUID HELIUM TANK, , HORIZONTAL UPPER RIB	SS 304L
2	251898	4	LIFTING PAD	SS 304L
1	251106	1	LIQUID HELIUM TANK, LOWER SHELL,	304L SS

REV	DWG	CHK	ZONE	DATE	CHANGES
D	RLM	JPZ		2/11/04	NEW LIFTING BOSSES FOR D1 AND Q3 SIDES
C	RLM	JPZ		6/23/03	ADDED 25M969 THERMAL MOUNTING PAD REMOVED REDUNDANT DIMENSION.
B	RLM	JPZ		6/9/03	Ø.485 WAS Ø.640; CORRECTED VIEWS
A	MJK	DPO		10/8/02	INITIAL RELEASE

UNLESS OTHERWISE SPECIFIED
TOLERANCES: X.X ± 0.1 FRAC. ± 1/64; X.XX ± 0.03 Angles ± 1.00°; X.XXX ± 0.010 FINISH 125
DO NOT SCALE PRINT
THREADS ARE CLASS 2
CHAMFER ENDS OF ALL SCREW THREADS 30°
C&D ROUND, 1.5 THREAD RELIEF ON MACHINED THREADS
BREAK EDGES .016 MAX. ON MACHINED WORK
REMOVE BURRS, WELD SPLATTER & LOOSE SCALE
IN ACCORDANCE WITH ASME Y14.5M & BAE-1

SHOP ORDERS
ERP NO. -
ACCT NO. NA REQD
DATE ISSD -
DEL TO -
DATE REQD -
SURFACE TREATMT -
IDENT METHOD TAG
PROJECT NUMBER N/A
PROJECT NAME N/A
DWG BY KNOLLS DATE 18-Jan-02
CHK BY Jon Zbasnik DATE 04-APR-02
APR BY Jon Zbasnik DATE 04-APR-02

ERNEST ORLANDO LAWRENCE
BERKELEY NATIONAL LABORATORY
UNIVERSITY OF CALIFORNIA - BERKELEY

LHC IR FEEDBOX
CRYOGENICS
LIQUID HELIUM TANK - 8 PORT LEFT

MICROFILMED: DWG. TYPE ASSEM SHOWN ON SCALE: 1/4 DO NOT SCALE PRINTS
SHEET 1 OF 4
PATENT CLEAR: DESIGN ACCT. NO. Z5LCE2 CATEGORY CODE LH2003 DWG. NO. 25i5756 SIZE D REV. D

DWG. NO. 25i5756 REV. D

Officially Released to the LBNL Document Control Center
Released: March 31st, 2004 DCC Auth Key: BU6Z410UYQ
Downloaded by: Daniel Pulsifer at April 09, 2007 10:57:39

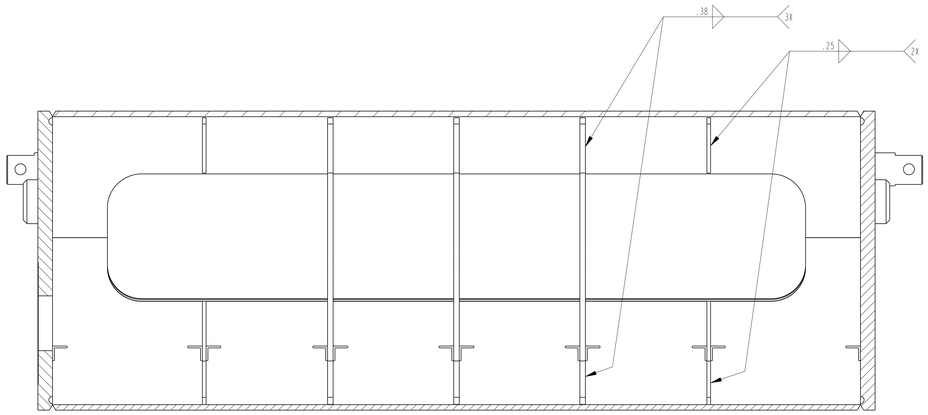

1ST WELDMENT STAGE

SECTION C-C
SCALE 1/4

VIEW ROTATED 180°

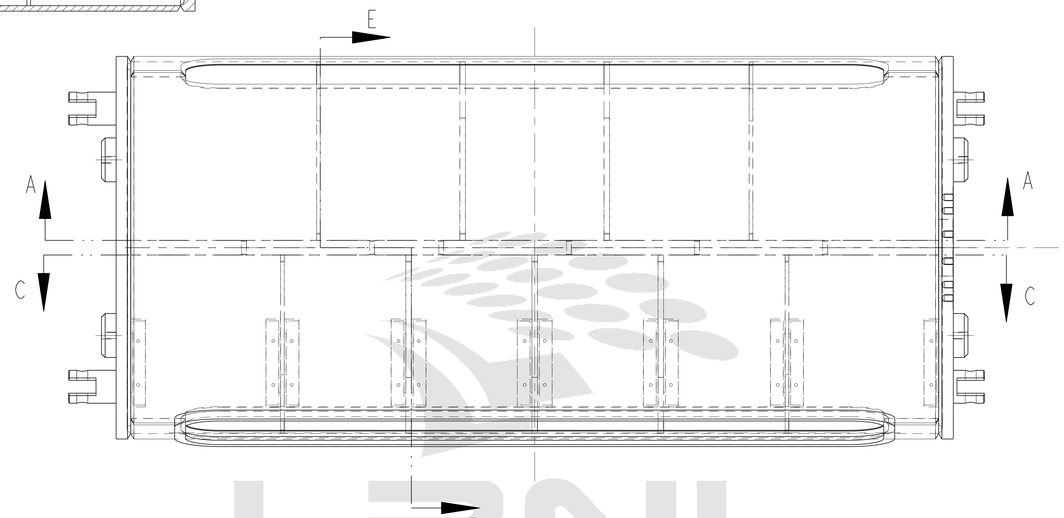

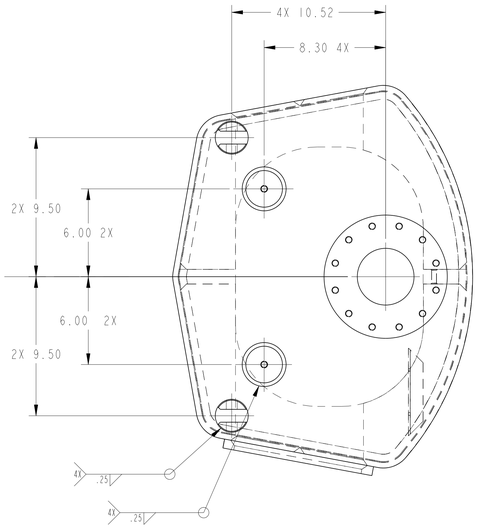

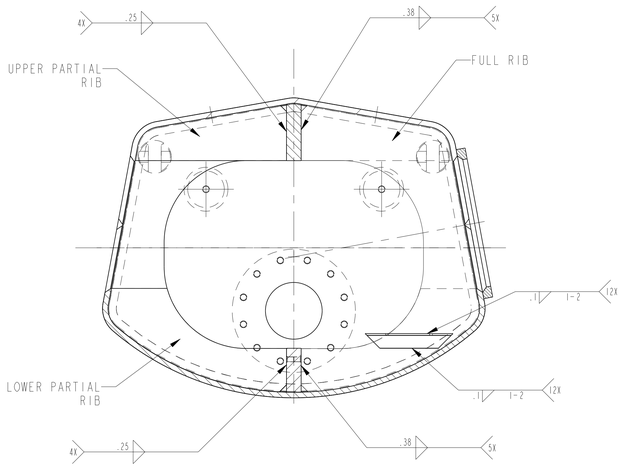

SECTION E-E

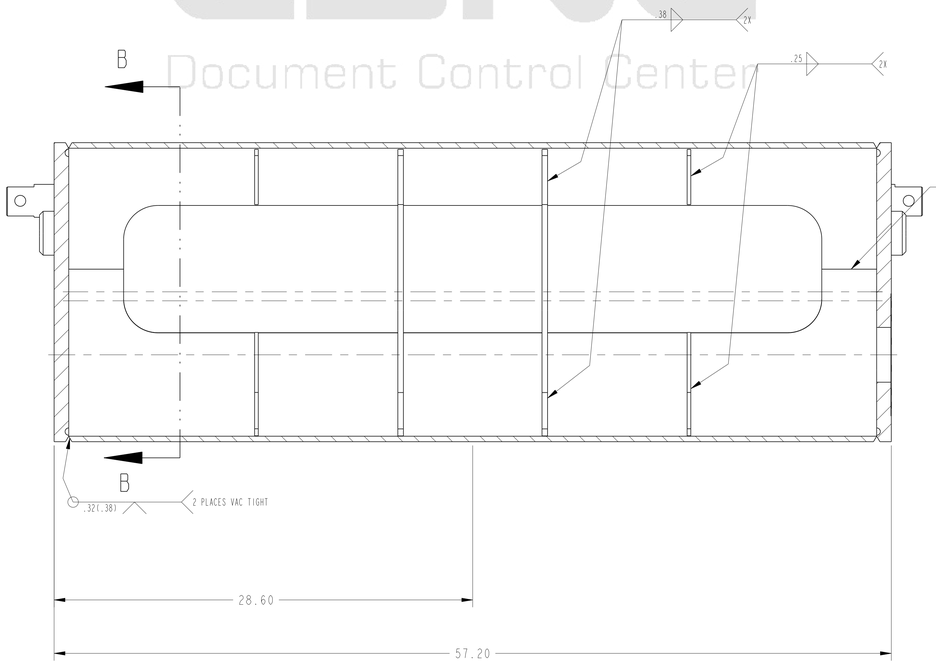

SECTION A-A

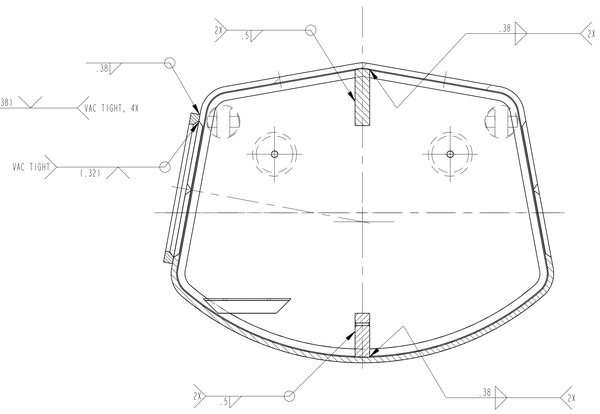

SECTION B-B

THIRD ANGLE PROJECTION

ERNEST ORLANDO LAWRENCE BERKELEY NATIONAL LABORATORY — UNIVERSITY OF CALIFORNIA - BERKELEY					
LHC IR FEEDBOX CRYOGENICS LIQUID HELIUM TANK - 8 PORT LEFT					
MICROFILMED:	DWG. TYPE: ASSEM	SHOWN ON:	SCALE: 1/4	DO NOT SCALE PRINTS	
			SHEET 2 OF 4		
PATENT CLEAR:	DESIGN ACCT. NO.: Z5LCE2	CATEGORY CODE: LH2003	DWG. NO.: 25i5756	SIZE: D	REV.

DWG. NO. 25i5756 SIZE D REV 2

LBNL Document Control Center

Officially Released to the LBNL Document Control Center
Released: March 31st, 2004 DCC Auth Key: BU6Z410UYQ

Downloaded by: Daniel Pulsifer at April 09, 2007 10:57:39

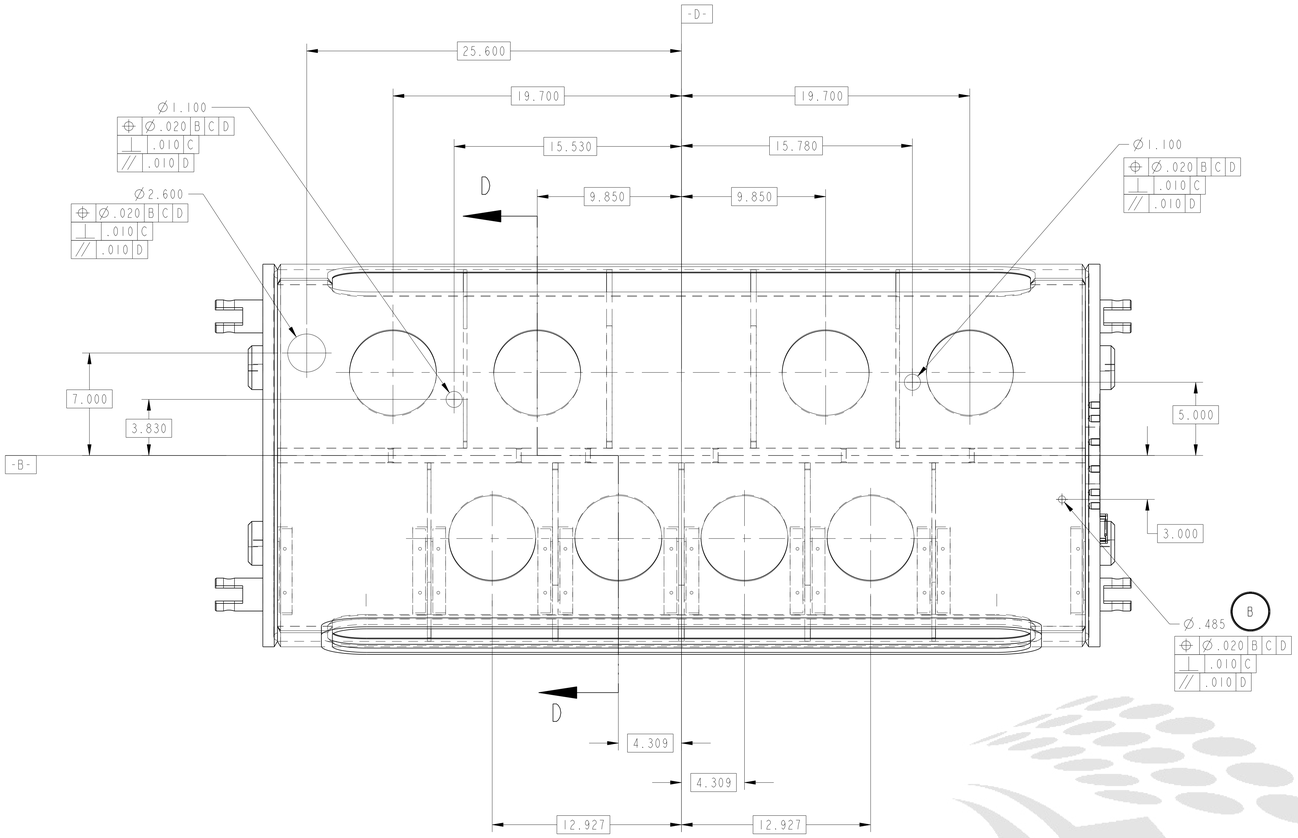

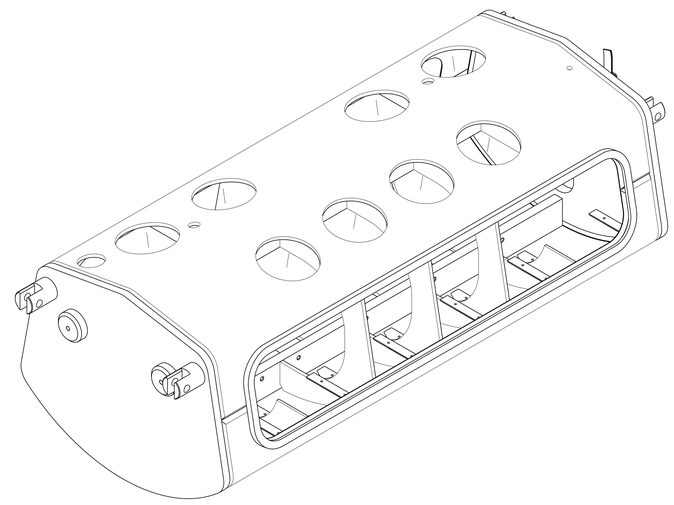

MACHINED STAGE

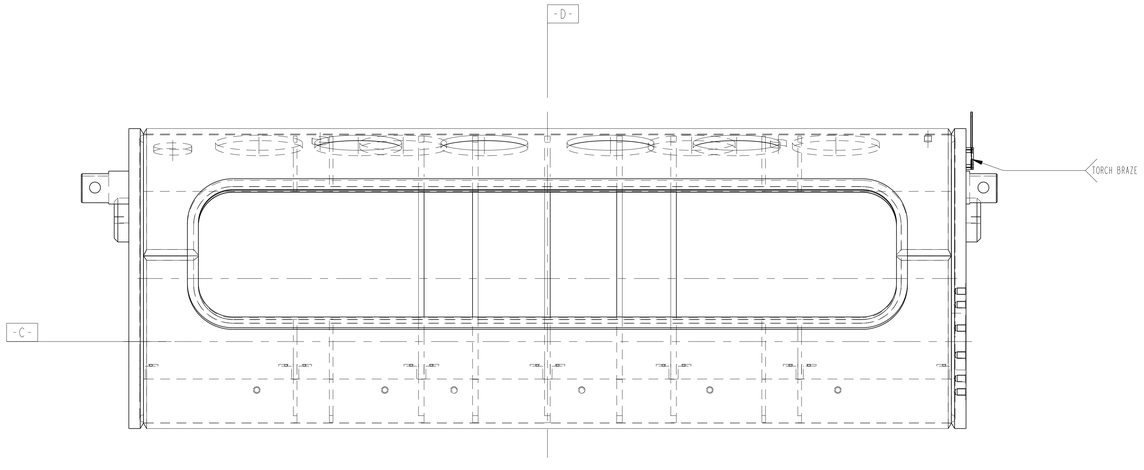

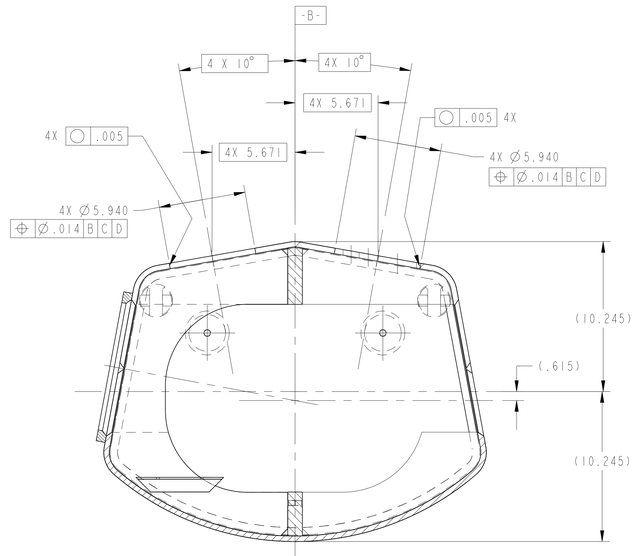

SECTION D-D

THIRD ANGLE PROJECTION

ERNEST ORLANDO LAWRENCE
BERKELEY NATIONAL LABORATORY
UNIVERSITY OF CALIFORNIA - BERKELEY

LHC IR FEEDBOX
CRYOGENICS
LIQUID HELIUM TANK - 8 PORT LEFT

MICROFILMED:	DWG. TYPE: ASSEM	SHOWN ON	SCALE: 1/4 DO NOT SCALE PRINTS
			SHEET 3 OF 4
PATENT CLEAR:	DESIGN ACCT. NO. Z5LCE2	CATEGORY CODE LH2003	DWG. NO. 25i5756 SIZE D REV.

DWG. NO. 25i5756 SIZE D SH 3

LBNL Document Control Center

Officially Released to the LBNL Document Control Center
Released: March 31st, 2004 DCC Auth Key: BU6Z410UYQ

Downloaded by: Daniel Pulsifer at April 09, 2007 10:57:39

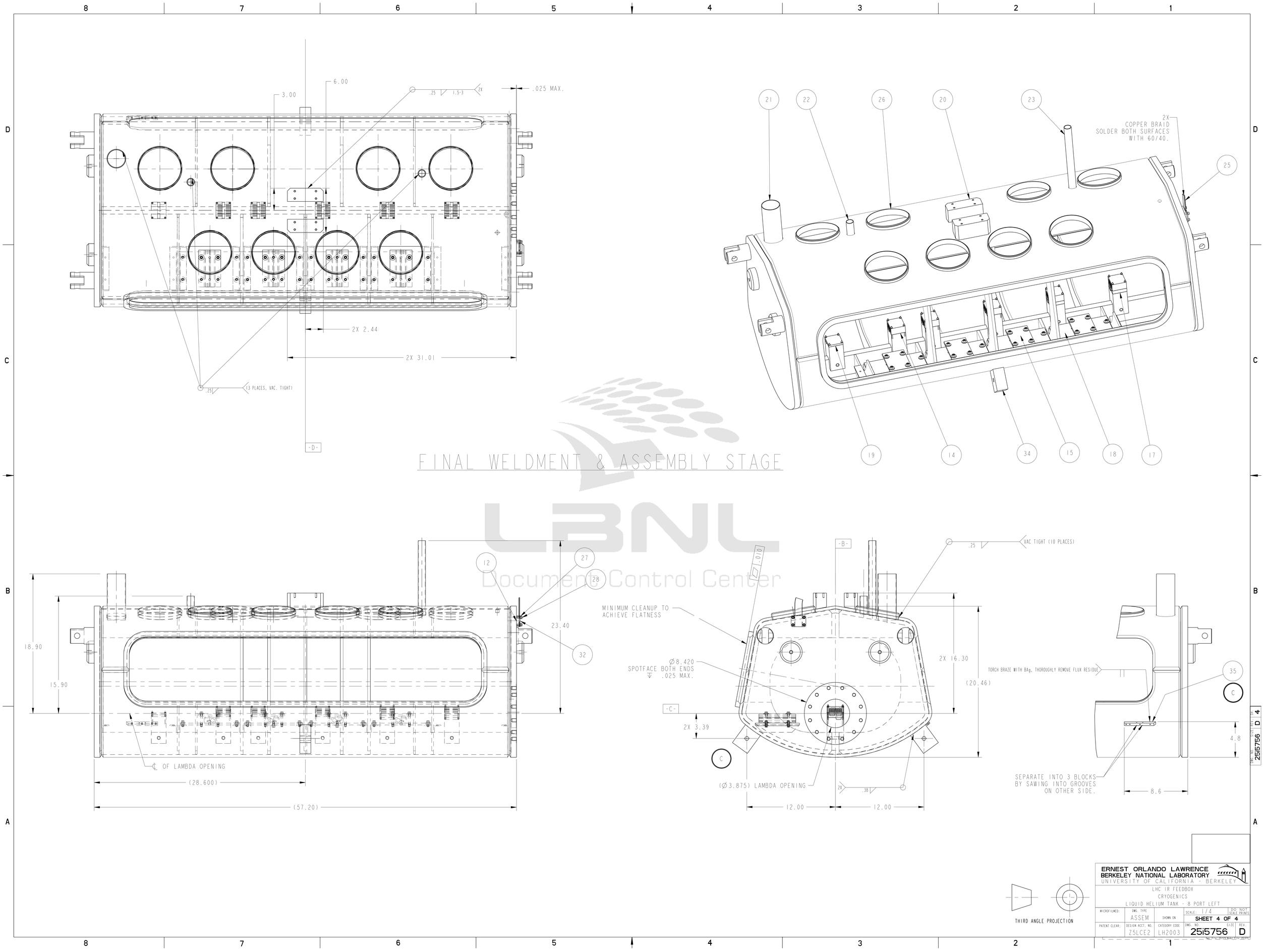

Officially Released to the LBNL Document Control Center
Released: March 31st, 2004 DCC Auth Key: BU6Z410UYQ
Downloaded by: Daniel Pulsifer at April 09, 2007 10:57:39