DESCRIPTION	MATERIAL	MAT. LOCATION
ROUND, PER ASTM A479	SS 304L	-

NOTES: (UNLESS OTHERWISE SPECIFIED)

1. THIS IS A CRYOGENIC VACUUM COMPONENT.
2. CLEAN AND DEGREASE AFTER MACHINING.
3. BAG AND TAG WITH 251536.
4. DIMENSIONS AND TOLERANCING PER ANSI Y14.5M-1982.
   UNITS ARE IN INCHES [mm] UNLESS OTHERWISE SPECIFIED.

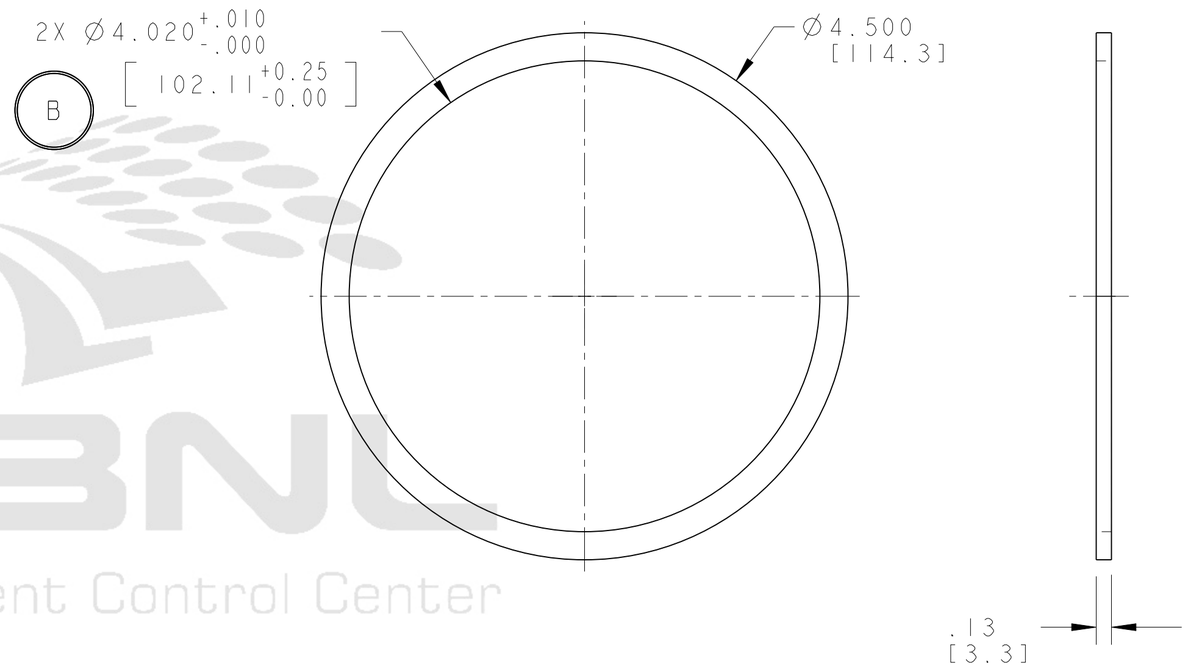

LBNL
Document Control Center

THIRD ANGLE PROJECTION

REV	DWG	CHK	ZONE	DATE	CHANGES
B	RLM	JPZ		1/23/03	DIM WAS 4.00, NOTE CHANGES
A	ARH	DPO		9/19/02	INITIAL RELEASE

UNLESS OTHERWISE SPECIFIED

TOLERANCES: X.X ± 0.1 | FRAC. ± 1/64 | X.XX ± 0.03 | Angles ± 1.00° | X.XXX ± 0.010 | FINISH 125 √(µin)

DO NOT SCALE PRINT

THREADS ARE CLASS 2
CHAMFER ENDS OF ALL SCREW TREADS 30°
CUT ROUND, 1.5 THREAD RELIEF ON MACHINED THREADS
BREAK EDGES .016 MAX. ON MACHINED WORK
REMOVE BURRS, WELD SPLATTER & LOOSE SCALE
IN ACCORDANCE WITH ASME Y14.5M & B46.1

SHOP ORDERS

SER NO.	-		
ACCT NO.		NO. REQD	DATE ISSD -
DEL TO			DATE REQD -
SURFACE TREATMT	-		
IDENT METHOD	TAG		
PROJECT NUMBER	N/A		N/A (logo)
PROJECT NAME	N/A		
DWG BY	R LA MANTIA		DATE 29-Jul-02
CHK BY	Jon Zbasnik		DATE 29-JUL-02
APR BY	Jon Zbasnik		DATE 29-JUL-02

ERNEST ORLANDO LAWRENCE
BERKELEY NATIONAL LABORATORY
UNIVERSITY OF CALIFORNIA - BERKELEY

LHC IR FEEDBOX
CRYOGENICS
GUIDE RING

MICROFILMED:	DWG. TYPE	SHOWN ON	SCALE: 1/1	DO NOT SCALE PRINTS
	PART	-	SHEET 1 OF 1	
PATENT CLEAR:	DESIGN ACCT. NO.	CATEGORY CODE	DWG. NO.	SIZE / REV.
	Z5LCE2	LH2003	2515363	B

Dwg. File: 251536 Model File: 251536

Rev: 1/29/2002 JL Kabrel

DWG. NO. 2515363 SIZE B REV. SH. 1

Officially Released to the LBNL Document Control Center
Released: March 5th, 2003 DCC Auth Key: OVMXZ6FK10

Downloaded by: Daniel Pulsifer at April 09, 2007 10:57:38