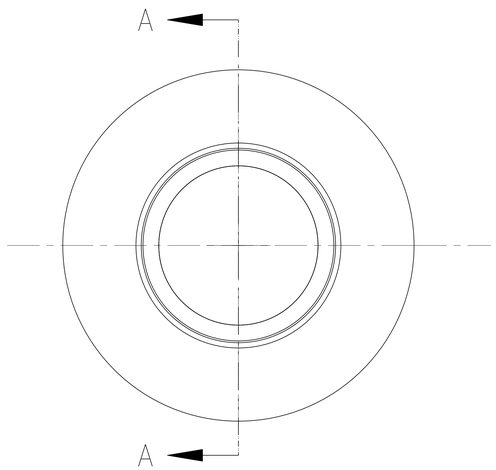

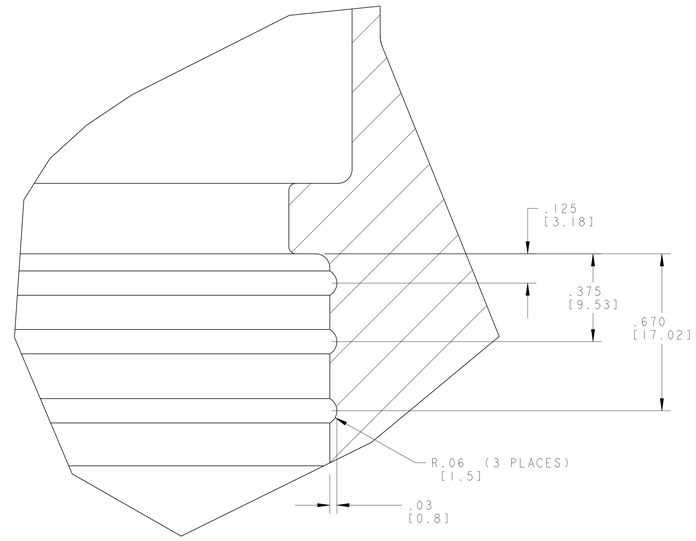

DETAIL A
SCALE 4/1

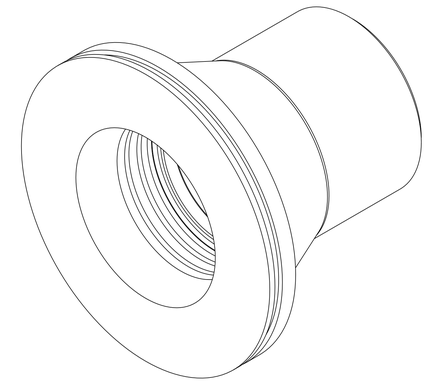

SCALE 1/1

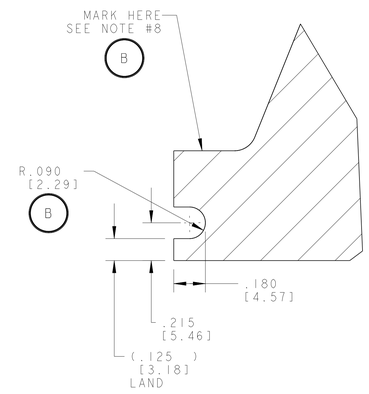

DETAIL B
SCALE 3/1

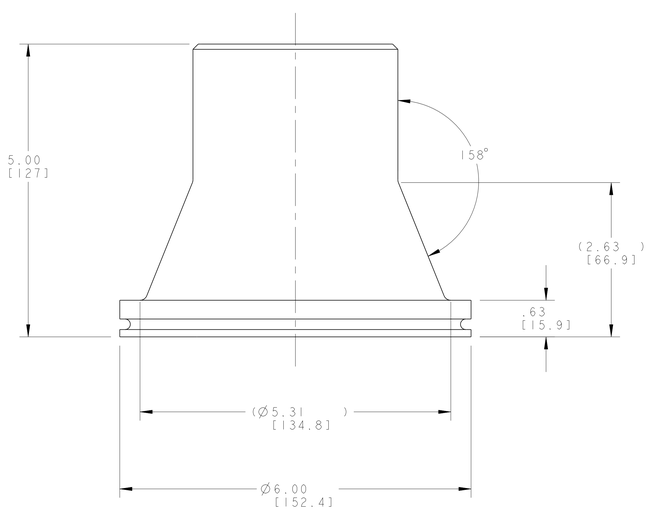

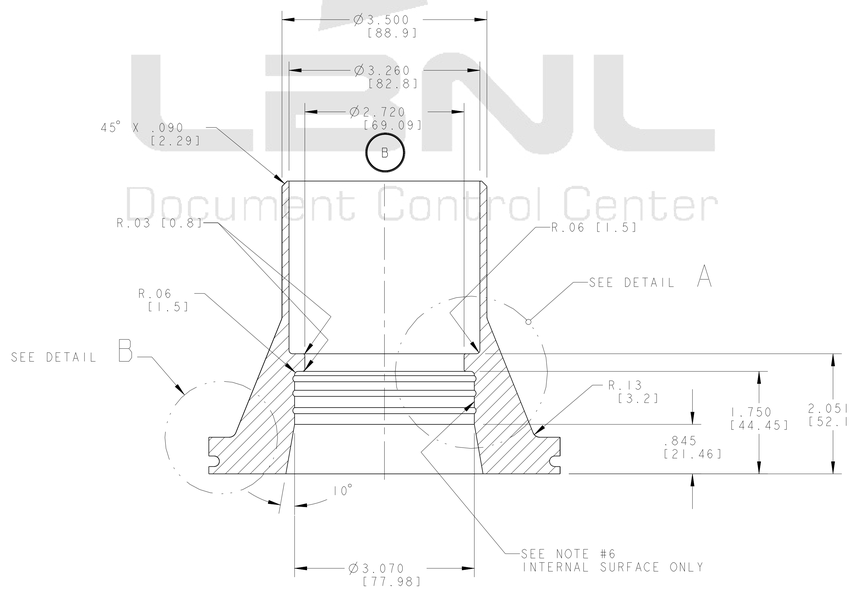

SECTION A - A

NOTES: (UNLESS OTHERWISE SPECIFIED)

1. THIS IS A CRYOGENIC VACUUM COMPONENT.
2. DEGREASE AFTER MACHINING.
3. DIMENSIONS AND TOLERANCING PER ANSI Y14.5M-1982. UNITS ARE IN INCHES [mm] UNLESS OTHERWISE SPECIFIED.
4. USE OF SULFUR OR SILICONE BEARING OILS, LUBRICANTS, OR COOLANTS ARE STRICTLY PROHIBITED.
5. USE OF RESIN OR RUBBER BONDED ABRASIVES UNDER POWER IS STRICTLY PROHIBITED. USE VITREOUS BONDED ABRASIVES ONLY.
6. GRIT BLAST USING ALUMINUM OXIDE-36 GRIT, FOLLOWED BY ALCHOHOL RINSE. (DONE AT LBL PRIOR TO EPOXY POTTING)
7. PROTECT FINISHED PART BY BAGGING OR SIMILAR METHOD TO PROTECT AND MAINTAIN CLEANLINESS DURING SHIPMENT AND STORAGE.
8. MARK WITH 251448 AND SEQUENTIAL SERIAL NUMBER USING LOW-STRESS STAMPS ON ELECTRO-ETCH; LETTERS 1/8" HIGH

THIRD ANGLE PROJECTION

REV	DWG	CHK	ZONE	DATE	CHANGES
C	RLM	DPO		12/17/02	UPDATED REVISION BLOCK INFORMATION FOR REV. B, DEF TOLS USED TO BE XX=.03, XXX=.010
B	SEB	DPO		10/25/02	Ø USED TO BE 2.700, WELD RELIEF DETAIL B USED TO BE R .125 AND .125 ⌵, NOTE 8 AND CALL OUT NEW.
A	ARH	DPO		9/19/02	INITIAL RELEASE

UNLESS OTHERWISE SPECIFIED
TOLERANCES: X.X ± 0.1 | FRAC. ± 1/64 | X.XX ± 0.02 | Angles ± 1.00° | X.XXX ± 0.005 | FINISH 125 µin
DO NOT SCALE PRINT
THREADS ARE CLASS 2
CHAMFER ENDS OF ALL SCREW THEADS 30°
CSK ROUND, 1.5 THREAD RELIEF ON MACHINED THREADS
BREAK EDGES .016 MAX. ON MACHINED WORK
REMOVE BURRS, WELD SPLATTER & LOOSE SCALE
IN ACCORDANCE WITH ASME Y14.5M & B46.1

SHOP ORDERS
ACCT NO. | NO REQD | DATE ISSD | SEL TO | DATE REQD | SURFACE TREATMT | IDENT METHOD TAG | PROJECT NUMBER N/A | PROJECT NAME N/A
DWN BY: K KNOLLS DATE 20-Aug-02
CHK BY: ZBASNIK, OSHATZ DATE 31-JUL-02
APR BY: ZBASNIK, OSHATZ DATE 31-JUL-02

ITEM	PART NO	REQD	DESCRIPTION	DESCRIPTION	MATERIAL	MANUFACTURER
			-		SS 304L	-

ERNEST ORLANDO LAWRENCE BERKELEY NATIONAL LABORATORY
UNIVERSITY OF CALIFORNIA - BERKELEY

LHC IR FEEDBOX
CRYOGENICS
LAMBDA PLUG, WELD NECK FLANGE

MICROFILMED: | DWG. TYPE: PART | SHOWN ON: - | SCALE: 1/1 | DO NOT SCALE PRINTS
PATENT CLEAR: | DESIGN ACCT. NO.: Z5LCE2 | CATEGORY CODE: LH2003 | DWG. NO.: 2514486 | SIZE: C | REV.: C
SHEET 1 OF 1

DWG. NO. 2514486 SIZE C REV 1

Officially Released to the LBNL Document Control Center
Released: March 5th, 2003 DCC Auth Key: IU59VKG6ZS
Downloaded by: Daniel Pulsifer at April 09, 2007 10:57:37