DESCRIPTION	MATERIAL	MAT. LOCATION
PIPE, HALVED	NEMA G10	-

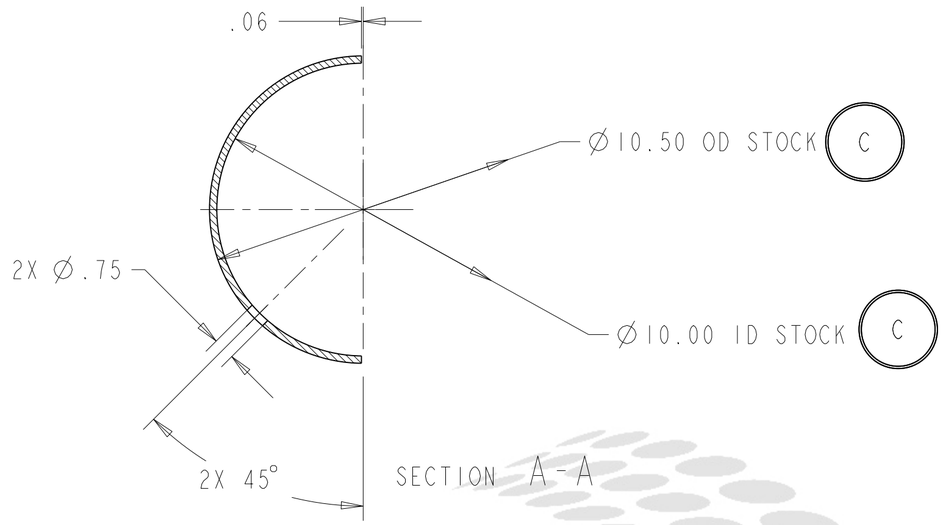

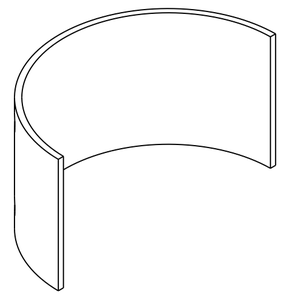

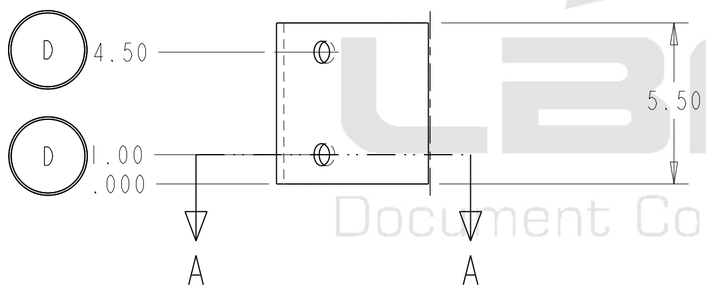

NOTES: (UNLESS OTHERWISE SPECIFIED)

1. THIS IS A CRYOGENIC VACUUM COMPONENT.
2. CLEANING PROCEDURE : PER VENDOR SPECIFICATION WITH LBNL APPROVAL.
3. PACKAGING AND STORAGE PROCEDURE OF THE COMPONENTS: PER VENDOR SPCIFICATION WITH LBNL APPROVAL.
4. DIMENSIONS AND TOLERANCING PER ANSI Y14.5M-1982. UNITS ARE IN INCHES UNLESS OTHERWISE SPECIFIED.
5. USE OF SULFUR OR SILICONE BEARING OILS, LUBRICANTS, OR COOLANTS ARE STRICTLY PROHIBITED.
6. USE OF RESIN OR RUBBER BONDED ABRASIVES UNDER POWER IS STRICTLY PROHIBITED. USE VITREOUS BONDED ABRASIVES ONLY.

LBNL Document Control Center

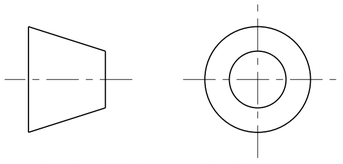

THIRD ANGLE PROJECTION

REV	DWG	CHK	ZONE	DATE	CHANGES
D	RLM	JPZ		09/30/03	ADDED MISSING DIMENSIONS
C	RLM	JPZ		6/23/03	10.50 STOCK WAS 10.60, 10.00 STOCK WAS 10.26
B	RLM	SPV		11-26-02	COSMETIC: MOVE SECTION ARROWS
A	RLM	DPO		10-4-02	INITIAL RELEASE

UNLESS OTHERWISE SPECIFIED

TOLERANCES		
	X.X ± 0.1	FRAC. ± 1/64
	X.XX ± 0.03	Angles ± 1.00°
	X.XXX ± 0.010	FINISH 125 √(µin)

DO NOT SCALE PRINT

THREADS ARE CLASS 2
CHAMFER ENDS OF ALL SCREW TREADS 30°
CUT ROUND, 1.5 THREAD RELIEF ON MACHINED THREADS
BREAK EDGES .016 MAX. ON MACHINED WORK
REMOVE BURRS, WELD SPLATTER & LOOSE SCALE
IN ACCORDANCE WITH ASME Y14.5M & B46.1

SHOP ORDERS			
ACCT NO.	NO. REQD	SER NO.	-
DEL TO		DATE ISSD	-
SURFACE TREATMT	-	DATE REQD	-
IDENT METHOD	TAG		
PROJECT NUMBER	N/A		N/A (logo)
PROJECT NAME	N/A		
DWG BY	R LA MANTIA	DATE	24-Jul-02
CHK BY	OSHATZ	DATE	19-Sep-02
APR BY	OSHATZ	DATE	19-Sep-02

ERNEST ORLANDO LAWRENCE BERKELEY NATIONAL LABORATORY
UNIVERSITY OF CALIFORNIA - BERKELEY

LHC IR FEEDBOX
CRYOGENICS
QRL ENCLOSURE, SHORT, IP 1, 2&8

MICROFILMED:	DWG. TYPE	SHOWN ON	SCALE: 0.250	DO NOT SCALE PRINTS
	PART	-	SHEET 1 OF 1	
PATENT CLEAR:	DESIGN ACCT. NO.	CATEGORY CODE	DWG. NO.	SIZE / REV.
	Z5LCE3	LH2003	25i4453	D

Dwg. File: 251445 Model File: 251445

DWG. NO. 25i4453 SIZE D REV. SH. 1

Officially Released to the LBNL Document Control Center
Released: October 1st, 2003 DCC Auth Key: 5CTYUC9YWM
Downloaded by: Daniel Pulsifer at April 09, 2007 10:57:37