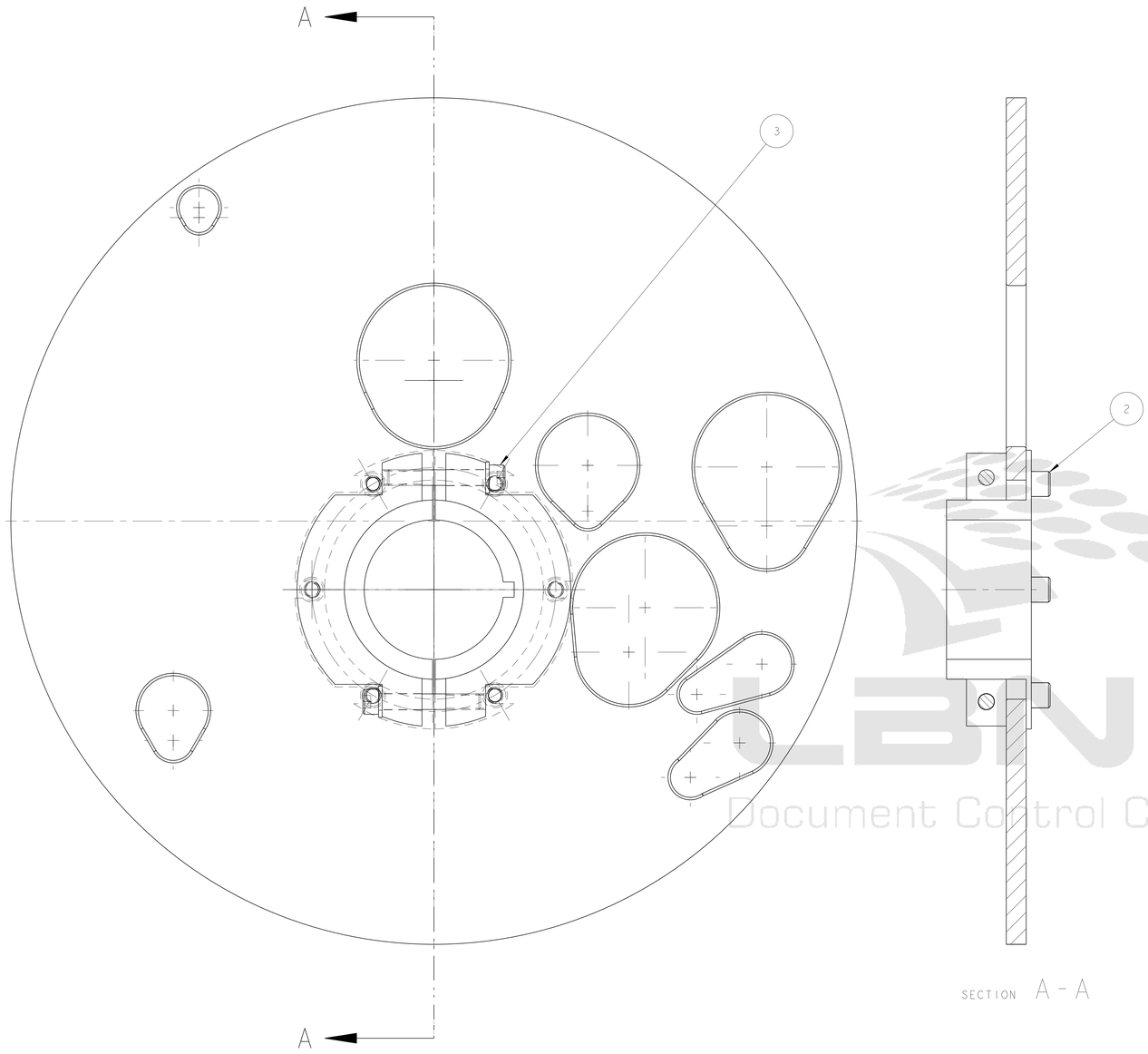

SECTION A - A

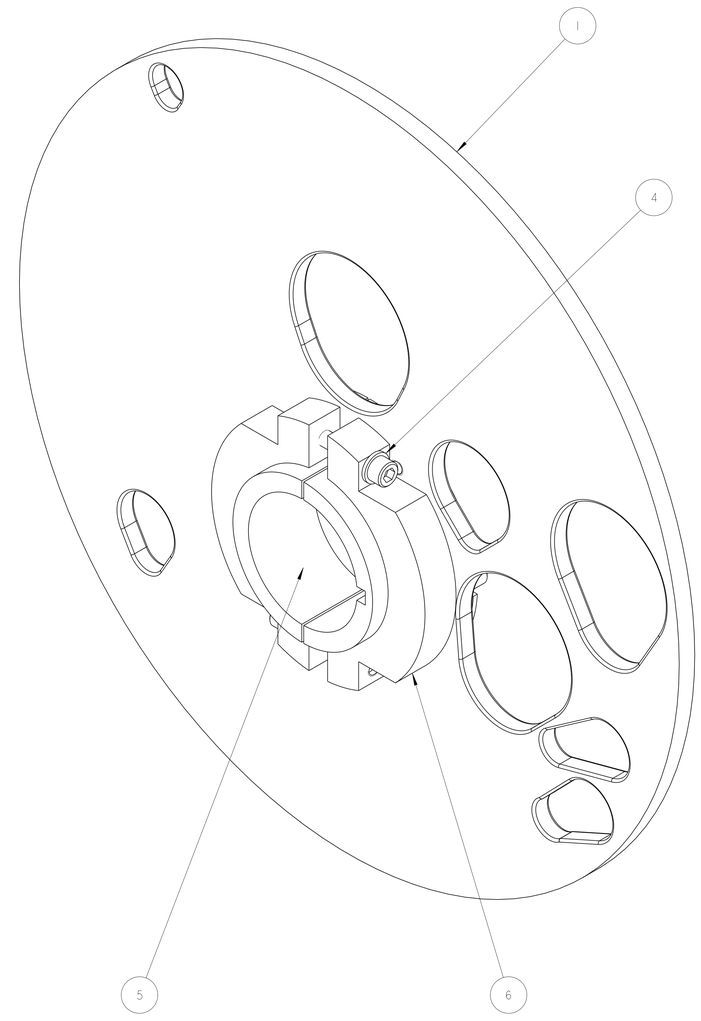

LBNL
Document Control Center

NOTES: UNLESS OTHERWISE SPECIFIED,

1. DIMENSIONS AND TOLERANCING PER ANSI Y14.5M-1982 UNITS ARE IN INCHES UNLESS OTHERWISE SPECIFIED.
2. PART IS PARALLEL TO PLANE OF REINFORCEMENT,
3. PROTECT FINISHED PART BY BAGGING OR SIMILAR METHOD TO PROTECT AND MAINTAIN CLEANLINESS DURING SHIPMENT AND STORAGE.
4. TAG WITH DRAWING NUMBER

THIRD ANGLE PROJECTION

REV	DWG	CHK	ZONE	DATE	CHANGES
C	RLM	JPZ		10/16/03	ADD MISSING DIMENSION 1.72"
B	ARH	SPV		01/27/03	REVISED BOM DESCRIPTION ITEM 4 TO REMOVE SILVER PLATE
A	MJK	SPV		11-22-02	INITIAL RELEASE

UNLESS OTHERWISE SPECIFIED
TOLERANCE: X.X ± 0.1 FRAC. ± 1/64; X.XX ± 0.02 Angles ± 1.00°; X.XXX ± 0.005 FINISH 125 √rms
DO NOT SCALE PRINT
THREADS ARE CLASS 2
CHAMFER ENDS OF ALL SCREW THREADS 30°
CUT ROUND, 1.5 THREAD RELIEF ON MACHINED THREADS
BREAK EDGES .016 MAX. ON MACHINED WORK
REMOVE BURRS, WELD SPLATTER & LOOSE SCALE
IN ACCORDANCE WITH ASME Y14.5M & B46.1

ITEM	PART NO.	REQD	DESCRIPTION	MATERIAL
6	25M801	2	SPLIT CLAMP	SS 304L
5	25M800	1	SPLIT HUB	SS 304L
4	-	2	WASHER, M10	SS 18-8
3	-	2	SCH, M10x1.5, 65mm LG, SILVER PLATE	SS 18-8
2	-	6	SCH, M10x1.5, 16mm LG, SILVER PLATE	SS 18-8
1	-	1	SUPPORT PLATE	NEMA G10

SHOP ORDERS
ACCT NO. / REQD / DATE
DEL TO / REQD
SURFACE TREATMT
IDENT METHOD TAG
PROJECT NUMBER N/A
PROJECT NAME N/A

DWN BY R.L.A. MANTIA DATE 18-July-02
CHK BY S.Virostek DATE 11/22/02
APR BY OSHATZ DATE 9/18/02

ERNEST ORLANDO LAWRENCE BERKELEY NATIONAL LABORATORY
UNIVERSITY OF CALIFORNIA - BERKELEY

LHC IR FEEDBOX
CRYOGENICS
SUPPORT, DI SIDE, DFBXD / DFBXH

MICROFILMED: | DWG. TYPE: ASSEM | SHOWN ON: - | SCALE: 3/4 | DO NOT SCALE PRINTS
PATENT CLEAR: | DESIGN ACCT. NO.: Z5LCE2 | CATEGORY CODE: LH2003 | DWG. NO.: 2514136 | SIZE: C | REV.: C
SHEET 1 OF 2

Officially Released to the LBNL Document Control Center
Released: October 28th, 2003 DCC Auth Key: 92VQ5HSYDF
Downloaded by: Daniel Pulsifer at April 09, 2007 10:57:37

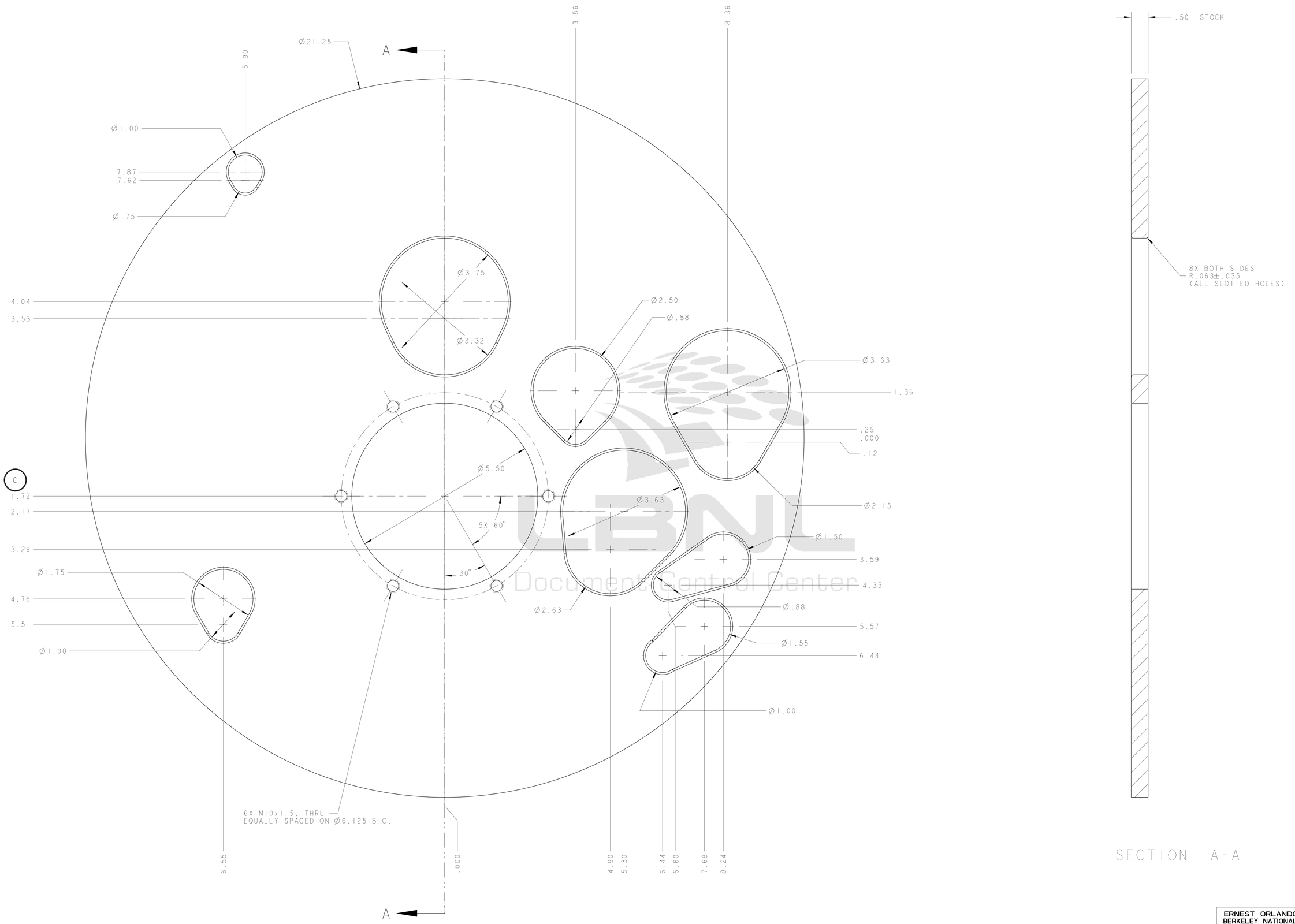

ERNEST ORLANDO LAWRENCE
BERKELEY NATIONAL LABORATORY
UNIVERSITY OF CALIFORNIA - BERKELEY

LHC IR FEEDBOX
CRYOGENICS
SUPPORT, DI SIDE, DFBXD / DFBXH

MICROFILMED:	DWG. TYPE	SHOWN ON	SCALE: 1/2	DO NOT SCALE PRINTS
	ASSEM	-	SHEET 2 OF 2	
PATENT CLEAR:	DESIGN ACCT. NO.	CATEGORY CODE	DWG. NO.	SIZE / REV.
	Z5LCE2	LH2003	2514136	C

DWG. NO. 2514136 SIZE C REV. 2

Officially Released to the LBNL Document Control Center
Released: October 28th, 2003 DCC Auth Key: 92VQ5HSYDF
Downloaded by: Daniel Pulsifer at April 09, 2007 10:57:37