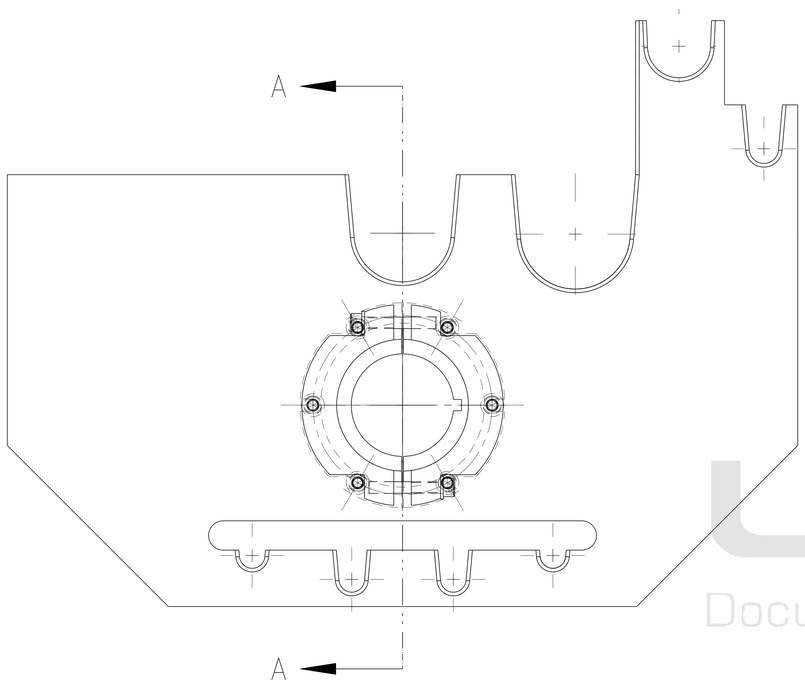

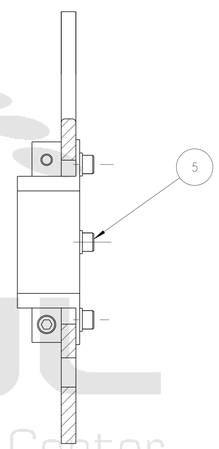

SECTION A - A

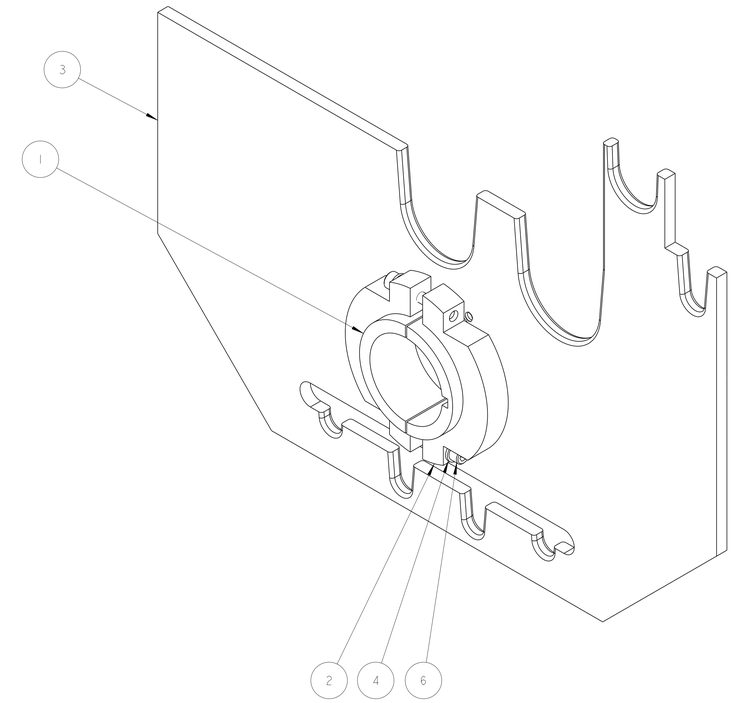

LBNL
Document Control Center

NOTES: (UNLESS OTHERWISE SPECIFIED)

1. THIS IS A CRYOGENIC VACUUM COMPONENT.
2. CLEANING PROCEDURE : PER VENDOR SPECIFICATION WITH LBNL APPROVAL.
3. PACKAGING AND STORAGE PROCEDURE OF THE COMPONENTS: PER VENDOR SPCIFICATION WITH LBNL APPROVAL.
4. DIMENSIONS AND TOLERANCING PER ANSI Y14.5M-1982. UNITS ARE IN INCHES UNLESS OTHERWISE SPECIFIED.
5. USE OF SULFUR OR SILICONE BEARING OILS, LUBRICANTS, OR COOLANTS ARE STRICTLY PROHIBITED.
6. USE OF RESIN OR RUBBER BONDED ABRASIVES UNDER POWER IS STRICTLY PROHIBITED. USE VITREOUS BONDED ABRASIVES ONLY.

ITEM	PART NO	DESCRIPTION	MATERIAL	REQD	DESIGNER	MAT Location
6	-	SCH, M10x1.5, 65mm LG, SILVER PLATE	SS 18-8	2		
5	-	SCH, M10x1.5, 16mm LG, SILVER PLATE	SS 18-8	6		
4	-	WASHER, M10	SS 18-8	8		
3	-	SUPPORT PLATE	NEMA G10	1	R LA MANTIA	
2	25M801	SPLIT CLAMP	SS 304L	2	KNOLLS	
1	25M800	SPLIT HUB	SS 304L	1	KNOLLS	

REV	DWG	CHK	ZONE	DATE	CHANGES
C	RLM	JPZ		11/10/03	CRADLE SIZE FOR LD1:2.23 WAS 1.83, 2.15 WAS 1.75
B	ARH	SPV		01/27/03	REMOVED SILVER PLATE DESCRIPTION FROM BOM ITEM 4
A	ARH	SPV		11-01-02	INITIAL RELEASE

THIRD ANGLE PROJECTION

UNLESS OTHERWISE SPECIFIED
TOLERANCES: X.X ± 0.1 FRAC. ± 1/64; X.XX ± 0.02 Angles ± 1.00°; X.XXX ± 0.005 FINISH 125/ 1/64
DO NOT SCALE PRINT
THREADS ARE CLASS 2
CHAMFER ENDS OF ALL SCREW TREADS 30°
CUT ROUND, 1.5 THREAD RELIEF ON MACHINED THREADS
BREAK EDGES .016 MAX. ON MACHINED WORK
REMOVE BURRS, WELD SPLATTER & LOOSE SCALE
IN ACCORDANCE WITH ASME Y14.5M & B46.1

SHOP ORDERS
ACCT NO. | NO. REQD | SER NO. | DATE ISSD | DEL TO | DATE REQD
SURFACE TREATMT | IDENT METHOD TAG
PROJECT NUMBER N/A
PROJECT NAME N/A
DWG BY R LA MANTIA DATE 18-July-02
CHK BY S.VIROSTEK DATE 01-Nov-02
APR BY D OSHATZ DATE 19-Sep-02

ERNEST ORLANDO LAWRENCE BERKELEY NATIONAL LABORATORY
UNIVERSITY OF CALIFORNIA - BERKELEY
LHC IR FEEDBOX
CRYOGENICS
SUPPORT, Q3 SIDE, DFBXA / DFBXF

MICROFILMED: | DWG. TYPE ASSEM | SHOWN ON - | SCALE: 1/2 | DO NOT SCALE PRINTS
PATENT CLEAR: | DESIGN ACCT. NO. Z5LCE2 | CATEGORY CODE LH2003 | DWG. NO. 2514126 | SIZE | REV. C
SHEET 1 OF 2

DWG. NO. 2514126 SIZE C REV. 1 SH. 1

Officially Released to the LBNL Document Control Center
Released: November 13th, 2003 DCC Auth Key: R01PWUECPD
Downloaded by: Daniel Pulsifer at April 09, 2007 10:57:37

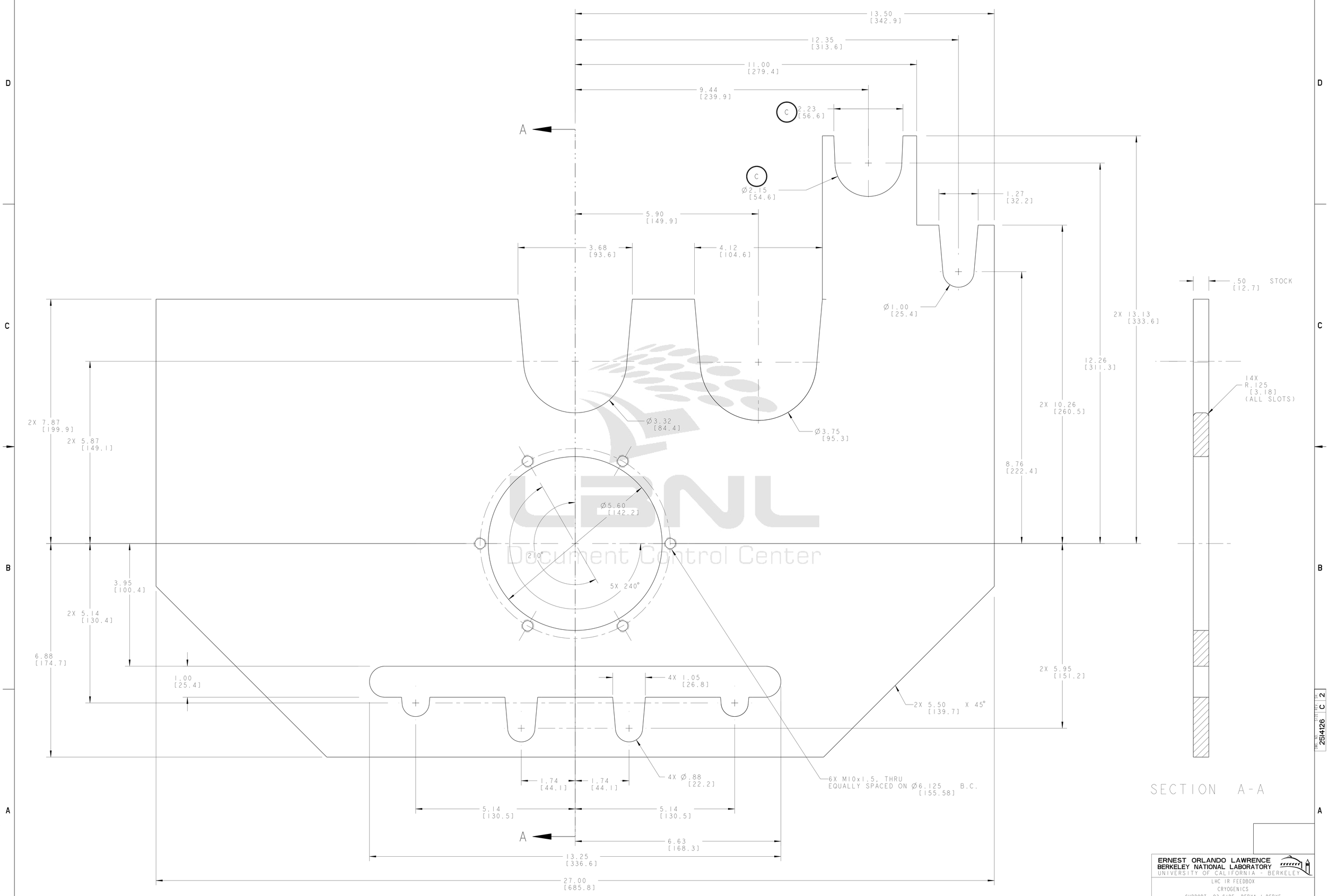

LBNL Document Control Center

ERNEST ORLANDO LAWRENCE BERKELEY NATIONAL LABORATORY
UNIVERSITY OF CALIFORNIA · BERKELEY

LHC IR FEEDBOX
CRYOGENICS
SUPPORT, Q3 SIDE, DFBXA / DFBXF

MICROFILMED:	DWG. TYPE	SHOWN ON	SCALE: 1/2	DO NOT SCALE PRINTS
	ASSEM	-	SHEET 2 OF 2	
PATENT CLEAR:	DESIGN ACCT. NO.	CATEGORY CODE	DWG. NO.	SIZE / REV.
	Z5LCE2	LH2003	2514126	C

Officially Released to the LBNL Document Control Center
Released: November 13th, 2003 DCC Auth Key: R01PWUECPD
Downloaded by: Daniel Pulsifer at April 09, 2007 10:57:37