NOTES: UNLESS OTHERWISE SPECIFIED,

1. DIMENSIONS AND TOLERANCING PER ANSI Y14.5M-1982 UNITS ARE IN INCHES UNLESS OTHERWISE SPECIFIED.
2. USE OF SULFUR OR SILICONE BEARING OILS, LUBRICANTS, OR COOLANTS ARE STRICTLY PROHIBITED
3. USE OF RESIN OR RUBBER BONDED ADRASIVES UNDER POWER IS STRICTLY PROHIBITED. USE VITREOUS BONDED ABRASIVES ONLY.
4. THIS IS A HIGH VACUUM COMPONENET. CLEAN AFTER MACHINING USING A NON-ETCHING ALKALI BASED SOLUTION.
6. PROTECT FINISHED PART BY BAGGING OR SIMILAR METHOD TO PROTECT AND MAINTAIN CLEANLINESS DURING SHIPMENT AND STORAGE.

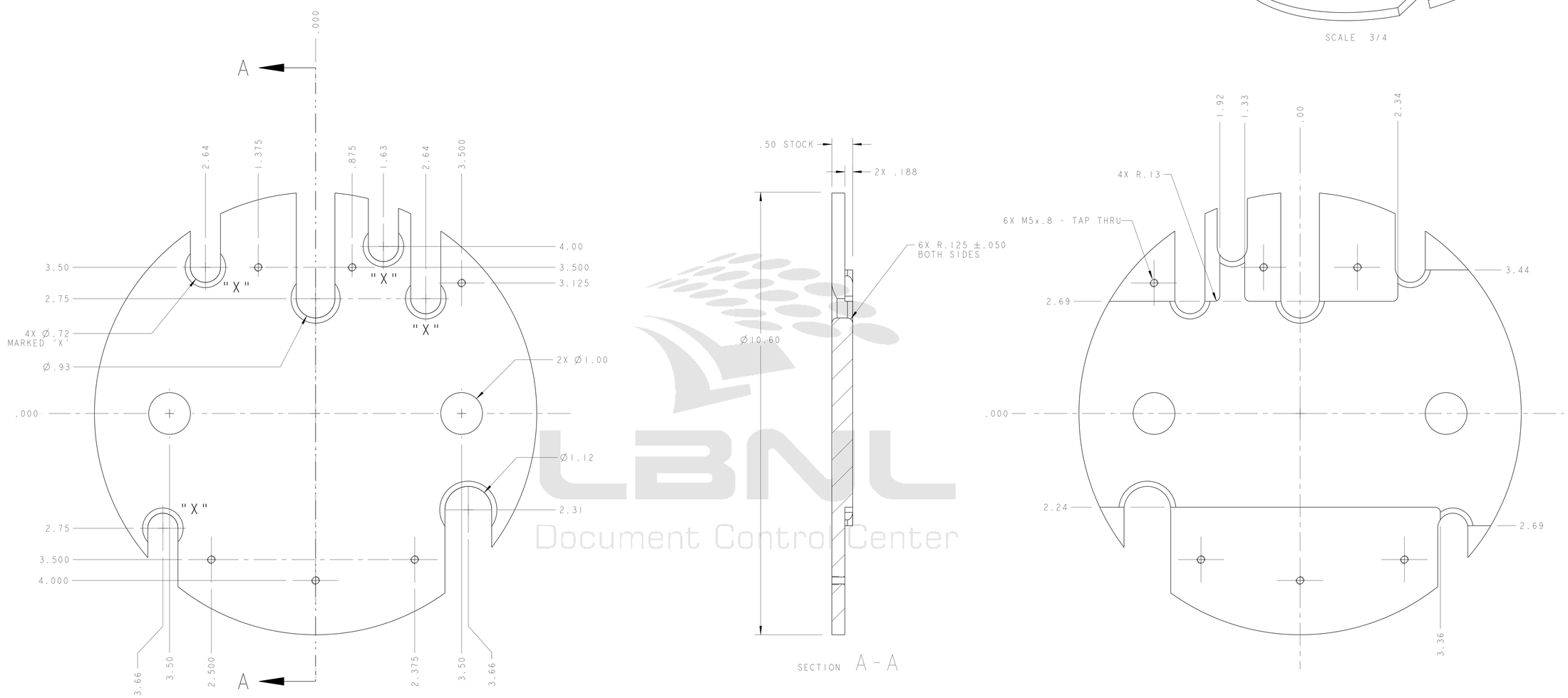

LBNL Document Control Center

THIRD ANGLE PROJECTION

REV	DWG	CHK	ZONE	DATE	CHANGES
A	ARH	SPV		11-14-02	INITIAL RELEASE

UNLESS OTHERWISE SPECIFIED
TOLERANCES: X.X ± 0.1 FRAC. ± 1/64; X.XX ± 0.02 Angles ± 1.00°; X.XXX ± 0.005 FINISH 125/ 1/64
DO NOT SCALE PRINT
THREADS ARE CLASS 2
CHAMFER ENDS OF ALL SCREW TREADS 30°
CUT ROUND, 1.5 THREAD RELIEF ON MACHINED THREADS
BREAK EDGES .016 MAX. ON MACHINED WORK
REMOVE BURRS, WELD SPLATTER & LOOSE SCALE
IN ACCORDANCE WITH ASME Y14.5M & B46.1

SHOP ORDERS
ACCT NO. | NO. REQD | SER NO. | DATE ISSD | DEL TO | DATE REQD
SURFACE TREATMT
IDENT METHOD TAG
PROJECT NUMBER
PROJECT NAME
DWN BY R LA MANTIA DATE 12-Oct-01
CHK BY Jon Zbasnik/S.Virostek DATE 14-Nov-02
APR BY Jon Zbasnik/D.Oshatz DATE 14-Nov-02

SUPPORT PLATE | NEMA G10
DESCRIPTION | MATERIAL | MAT. LOCATION

ERNEST ORLANDO LAWRENCE BERKELEY NATIONAL LABORATORY
UNIVERSITY OF CALIFORNIA - BERKELEY

LHC IR FEEDBOX
CRYOGENICS
SUPPORT PLATE

MICROFILMED: | DWG. TYPE PART | SHOWN ON - | SCALE: 1/1 | DO NOT SCALE PRINTS
PATENT CLEAR: | DESIGN ACCT. NO. Z5LCE2 | CATEGORY CODE LH2003 | DWG. NO. 2513956 | SIZE A | REV. A
SHEET 1 OF 1

DWG. NO. 2513956 | SIZE A | REV. 1

Officially Released to the LBNL Document Control Center
Released: December 19th, 2002 DCC Auth Key: S3CDGBJ48W
Downloaded by: Daniel Pulsifer at April 09, 2007 10:57:36