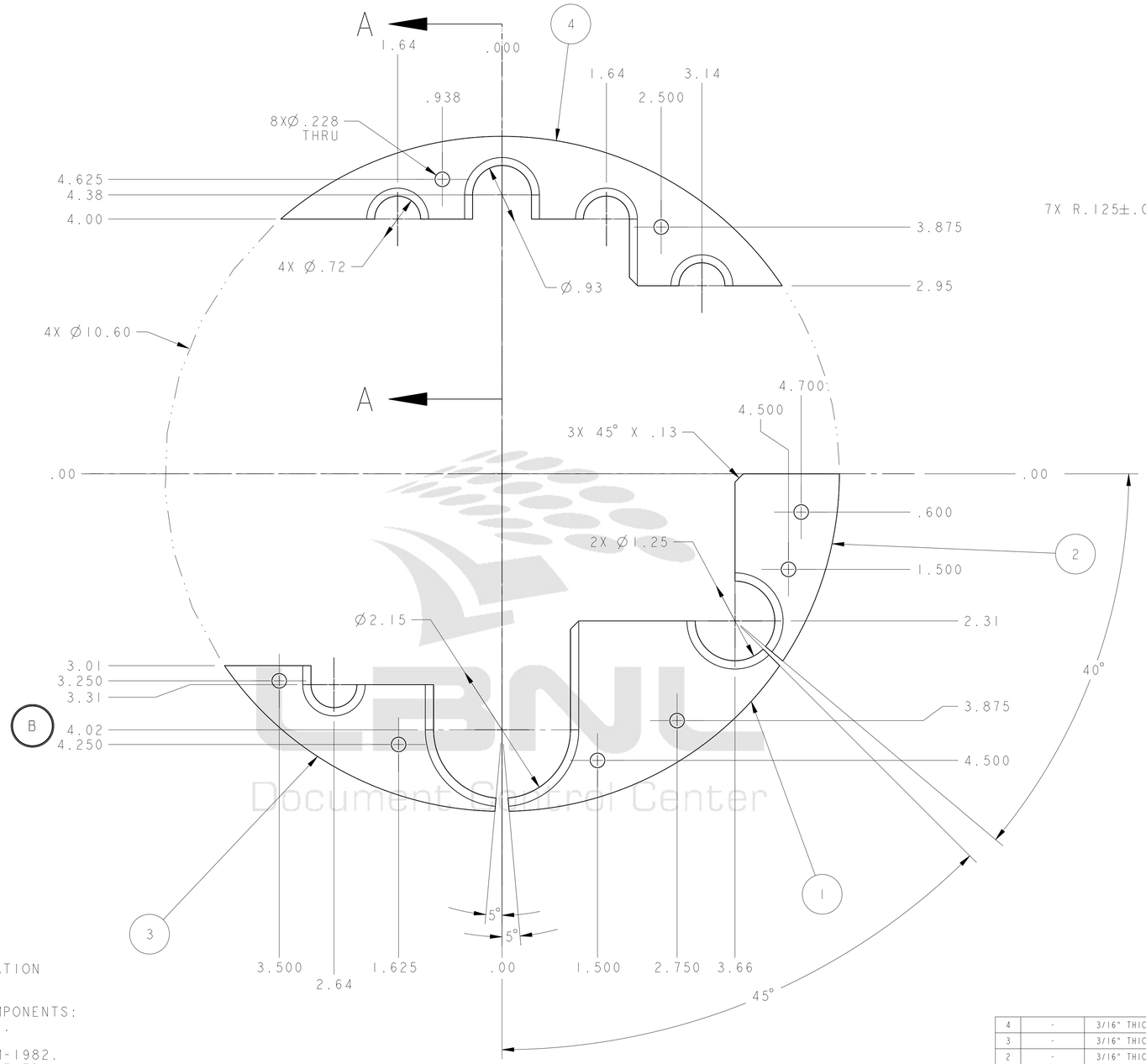

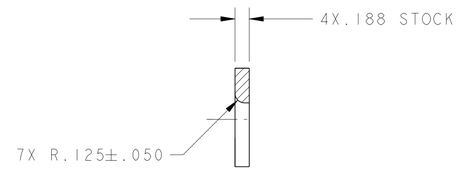

SECTION A - A
TYPICAL FOR ALL PLATES

NOTES: (UNLESS OTHERWISE SPECIFIED)

1. THIS IS A CRYOGENIC VACUUM COMPONENT.
2. CLEANING PROCEDURE : PER VENDOR SPECIFICATION WITH LBNL APPROVAL.
3. PACKAGING AND STORAGE PROCEDURE OF THE COMPONENTS: PER VENDOR SPCIFICATION WITH LBNL APPROVAL.
4. DIMENSIONS AND TOLERANCING PER ANSI Y14.5M-1982. UNITS ARE IN INCHES UNLESS OTHERWISE SPECIFIED.
5. USE OF SULFUR OR SILICONE BEARING OILS, LUBRICANTS, OR COOLANTS ARE STRICTLY PROHIBITED.
6. USE OF RESIN OR RUBBER BONDED ABRASIVES UNDER POWER IS STRICTLY PROHIBITED. USE VITREOUS BONDED ABRASIVES ONLY.

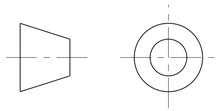

THIRD ANGLE PROJECTION

ITEM	PART NO	DESCRIPTION	MATERIAL	REQD	DESIGNER	MAT Location
4	-	3/16" THICK PLATE, RETAINER -4	NEMA G10	1	R LA MANTIA	
3	-	3/16" THICK PLATE, RETAINER -3	NEMA G10	1	R LA MANTIA	
2	-	3/16" THICK PLATE, RETAINER -2	NEMA G10	1	R LA MANTIA	
1	-	3/16" THICK PLATE, RETAINER -1	NEMA G10	1	R LA MANTIA	

REV	DWG	CHK	ZONE	DATE	CHANGES
B	RLM	SPV		11-26-02	ADD DIMENSION, MISC COSMETIC
A	RLM	DPO		10-4-02	INITIAL RELEASE

UNLESS OTHERWISE SPECIFIED
TOLERANCES: X.X ± 0.1 FRAC. ± 1/64; X.XX ± 0.02 Angles ± 1.00°; X.XXX ± 0.005 FINISH 125 √(Ra)
DO NOT SCALE PRINT
THREADS ARE CLASS 2
CHAMFER ENDS OF ALL SCREW TREADS 30°
CUT ROUND, 1.5 THREAD RELIEF ON MACHINED THREADS
BREAK EDGES .016 MAX. ON MACHINED WORK
REMOVE BURRS, WELD SPLATTER & LOOSE SCALE
IN ACCORDANCE WITH ASME Y14.5M & B46.1

SHOP ORDERS
ACCT NO. / NO. REQD / SER. NO. -
DEL TO / DATE ISSD -
DATE REQD -
SURFACE TREATMT -
IDENT METHOD TAG
PROJECT NUMBER N/A
PROJECT NAME N/A
DWG BY R LA MANTIA DATE 23-July-02
CHK BY D OSHATZ DATE 19-Sep-02
APR BY D OSHATZ DATE 19-Sep-02

ERNEST ORLANDO LAWRENCE
BERKELEY NATIONAL LABORATORY
UNIVERSITY OF CALIFORNIA - BERKELEY

LHC IR FEEDBOX
CRYOGENICS
RETAINER PLATE ASSEMBLY

MICROFILMED: | DWG. TYPE ASSEM | SHOWN ON - | SCALE: 1/1 | DO NOT SCALE PRINTS
SHEET 1 OF 1
PATENT CLEAR: | DESIGN ACCT. NO. Z5LCE2 | CATEGORY CODE LH2003 | DWG. NO. 2513724 | SIZE | REV. B

LBNL Document Control Center

Officially Released to the LBNL Document Control Center
Released: March 5th, 2003 DCC Auth Key: JDN5HE43YK

Downloaded by: Daniel Pulsifer at April 09, 2007 10:57:35