DESCRIPTION	MATERIAL	MAT. LOCATION
-	SS 304L	-

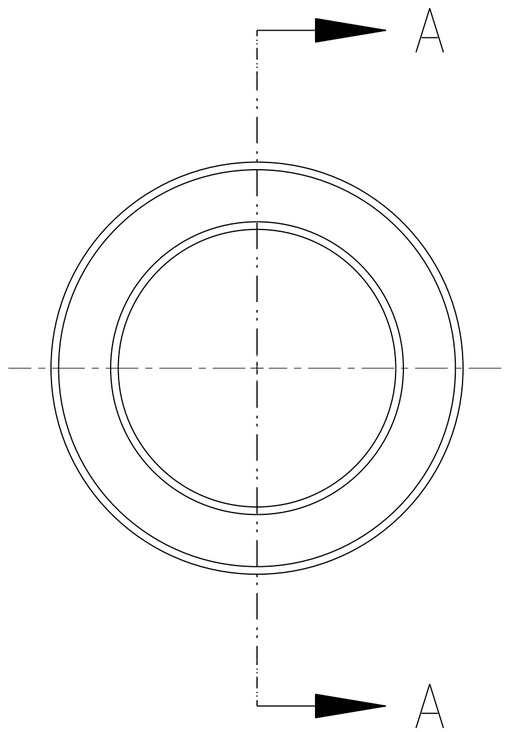

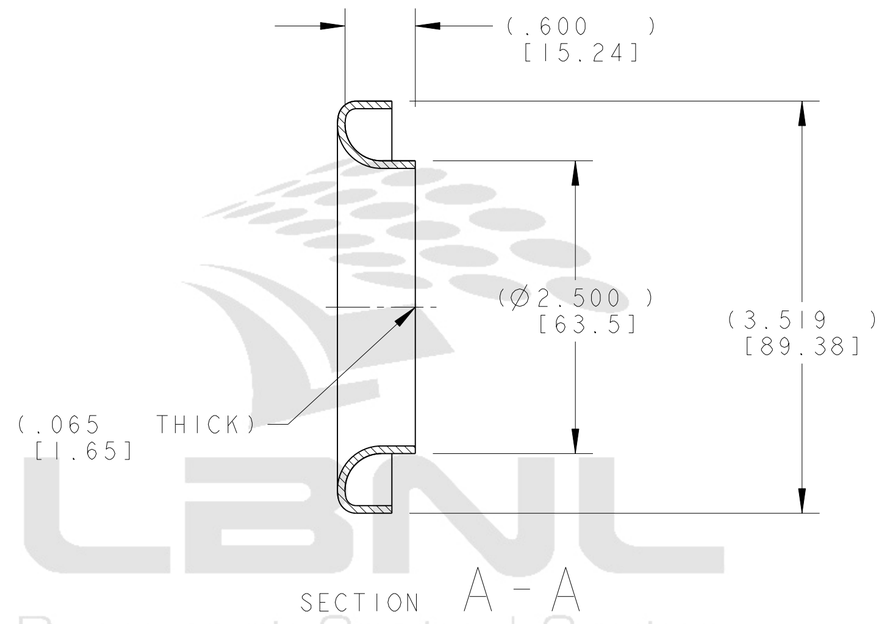

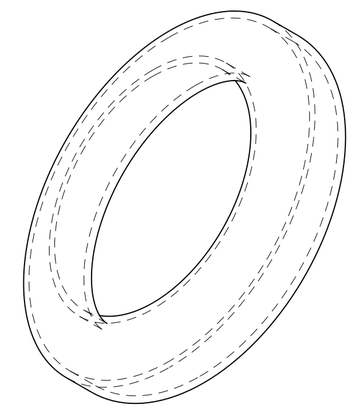

PROVIDED FOR REFERENCE ONLY. NOT INTENDED FOR FABRICATION.

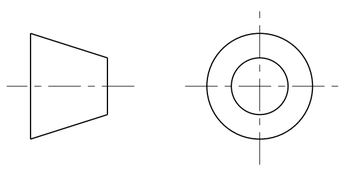

THIRD ANGLE PROJECTION

REV	DWG	CHK	ZONE	DATE	CHANGES
A	ARH	DPO		9/19/02	INITIAL RELEASE

UNLESS OTHERWISE SPECIFIED

TOLERANCES		
	X.X ± 0.1	FRAC. ± 1/64
	X.XX ± 0.01	Angles ± 1.00°
	X.XXX ± 0.005	FINISH 125 (μin)

DO NOT SCALE PRINT

THREADS ARE CLASS 2
CHAMFER ENDS OF ALL SCREW TREADS 30°
CUT ROUND, 1.5 THREAD RELIEF ON MACHINED THREADS
BREAK EDGES .016 MAX. ON MACHINED WORK
REMOVE BURRS, WELD SPLATTER & LOOSE SCALE
IN ACCORDANCE WITH ASME Y14.5M & B46.1

SHOP ORDERS

ACCT NO.	NO. REQD	SER NO.	-
DEL TO		DATE ISSD	-
SURFACE TREATMT	-	DATE REQD	-
IDENT METHOD	TAG		
PROJECT NUMBER	N/A		
PROJECT NAME	FERMI LAB		
DWG BY	KNOLLS	DATE	02-Aug-02
CHK BY	Jon Zbasnik	DATE	21-Mar-02
APR BY	Jon Zbasnik	DATE	21-Mar-02

FERMI LAB (logo)

ERNEST ORLANDO LAWRENCE
BERKELEY NATIONAL LABORATORY
UNIVERSITY OF CALIFORNIA - BERKELEY

LHC IR FEEDBOX
CRYOGENICS
FLANGE, BNL# 12130089

MICROFILMED:	DWG. TYPE	SHOWN ON	SCALE: 1/1	DO NOT SCALE PRINTS
	PART	-	SHEET 1 OF 1	
PATENT CLEAR:	DESIGN ACCT. NO.	CATEGORY CODE	DWG. NO. 2513513 SIZE	REV. A
	Z5LCE2	LH2003		

Dwg. File: 251351 Model File: 12130089_FLANGE

DWG. NO. 2513513 SIZE A REV. SH. 1

Rev. 1/29/2000 J. R. Osborn

Officially Released to the LBNL Document Control Center
Released: October 1st, 2002 DCC Auth Key: B3W8SFEB0E
Downloaded by: Daniel Pulsifer at April 09, 2007 10:57:35