DESCRIPTION	MATERIAL	MAT. LOCATION
BAR OR ROD,1" THK.HR, ANNEALED, PKLD, ASTM 240 OR 479	SS 304L	-

NOTES: (UNLESS OTHERWISE SPECIFIED)

1. DIMENSIONS AND TOLERANCING PER ANSI Y14.5M-1982.
   UNITS ARE IN INCHES [mm] UNLESS OTHERWISE SPECIFIED.

2. PACKAGING AND STORAGE PROCEDURE OF THE COMPONENTS:
   PER VENDOR SPECIFICATION WITH LBNL APPROVAL.

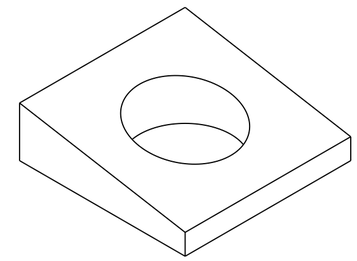

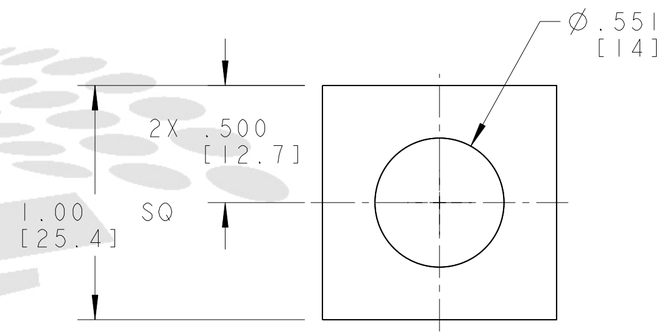

LBNL
Document Control Center

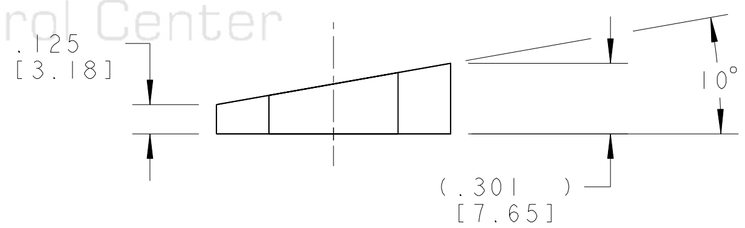

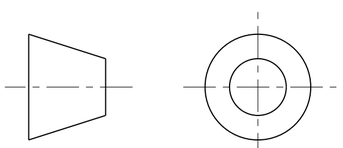

THIRD ANGLE PROJECTION

REV	DWG	CHK	ZONE	DATE	CHANGES
A	ARH	DPO		9-16-02	INITIAL RELEASE

UNLESS OTHERWISE SPECIFIED

TOLERANCES		
	X.X ± 0.1	FRAC. ± 1/64
	X.XX ± 0.03	Angles ± 1.00°
	X.XXX ± 0.010	FINISH 125 √(μin)

DO NOT SCALE PRINT

THREADS ARE CLASS 2
CHAMFER ENDS OF ALL SCREW TREADS 30°
CUT ROUND, 1.5 THREAD RELIEF ON MACHINED THREADS
BREAK EDGES .016 MAX. ON MACHINED WORK
REMOVE BURRS, WELD SPLATTER & LOOSE SCALE
IN ACCORDANCE WITH ASME Y14.5M & B46.1

SHOP ORDERS

ACCT NO.	NO. REQD	SER NO.	-
DEL TO		DATE ISSD	-
		DATE REQD	-
SURFACE TREATMT	-		
IDENT METHOD	TAG		
PROJECT NUMBER	N/A		
PROJECT NAME	N/A		
DWG BY	A. ZACHOSZCZ	DATE	08-Oct-01
CHK BY	Jon Zbasnik	DATE	4-02-02
APR BY	Jon Zbasnik	DATE	4-02-02

ERNEST ORLANDO LAWRENCE
BERKELEY NATIONAL LABORATORY
UNIVERSITY OF CALIFORNIA - BERKELEY

LHC IR FEEDBOX
ELECTRICAL
BEVELED WASHER

MICROFILMED:	DWG. TYPE	SHOWN ON	SCALE: 2/1	DO NOT SCALE PRINTS
	PART		SHEET 1 OF 1	
PATENT CLEAR:	DESIGN ACCT. NO.	CATEGORY CODE	DWG. NO.	SIZE / REV.
	Z5LCE2	LH2004	2513303	A

Dwg. File: 251330_Model File: BEVELED_WASHER

DWG. NO. 2513303 SIZE A REV. SH. 1

Rev 1/28/2000 J. Odaira

Officially Released to the LBNL Document Control Center
Released: October 1st, 2002 DCC Auth Key: 2HU09YR2HW
Downloaded by: Daniel Pulsifer at April 09, 2007 10:57:34