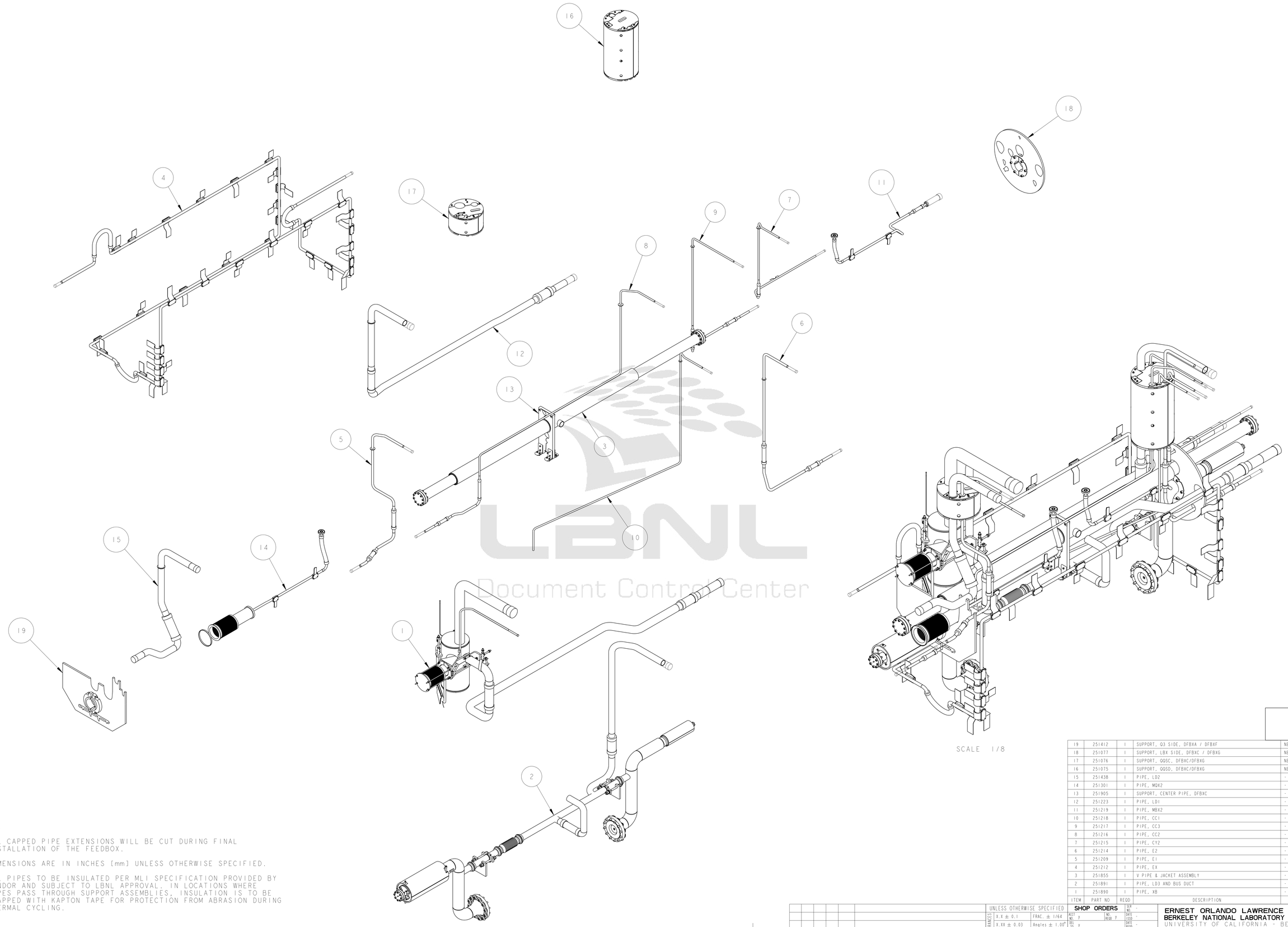

SCALE 1/8

NOTES:

1. ALL CAPPED PIPE EXTENSIONS WILL BE CUT DURING FINAL INSTALLATION OF THE FEEDBOX.
2. DIMENSIONS ARE IN INCHES [mm] UNLESS OTHERWISE SPECIFIED.
3. ALL PIPES TO BE INSULATED PER MLI SPECIFICATION PROVIDED BY VENDOR AND SUBJECT TO LBNL APPROVAL. IN LOCATIONS WHERE PIPES PASS THROUGH SUPPORT ASSEMBLIES, INSULATION IS TO BE WRAPPED WITH KAPTON TAPE FOR PROTECTION FROM ABRASION DURING THERMAL CYCLING.

THIRD ANGLE PROJECTION

ITEM	PART NO	REQD	DESCRIPTION	MATERIAL
19	251412	1	SUPPORT, Q3 SIDE, DFBXA / DFBXF	NEMA G10
18	251077	1	SUPPORT, LBX SIDE, DFBXC / DFBXG	NEMA G10
17	251076	1	SUPPORT, QQSC, DFBXC/DFBXG	NEMA G10
16	251075	1	SUPPORT, QQSD, DFBXC/DFBXG	NEMA G10
15	251438	1	PIPE, LD2	-
14	251301	1	PIPE, MQX2	-
13	251905	1	SUPPORT, CENTER PIPE, DFBXC	-
12	251223	1	PIPE, LD1	-
11	251219	1	PIPE, MBX2	-
10	251218	1	PIPE, CC1	-
9	251217	1	PIPE, CC3	-
8	251216	1	PIPE, CC2	-
7	251215	1	PIPE, CY2	-
6	251214	1	PIPE, E2	-
5	251209	1	PIPE, E1	-
4	251212	1	PIPE, EX	-
3	251855	1	V PIPE & JACKET ASSEMBLY	-
2	251891	1	PIPE, LD3 AND BUS DUCT	-
1	251890	1	PIPE, XB	-

REV	DWG	CHK	ZONE	DATE	CHANGES
B	ARH	DPO		02/05/03	UPDATED SUBASSEMBLY VIEWS
A	JDR	DPO			INITIAL CHANGES

UNLESS OTHERWISE SPECIFIED

TOLERANCES		
	X.X ± 0.1	FRAC. ± 1/64
	X.XX ± 0.03	Angles ± 1.00°
	X.XXX ± 0.010	FINISH 125/

DO NOT SCALE PRINT

THREADS ARE CLASS 2
CHAMFER ENDS OF ALL SCREW THREADS 30°
CUT ROUND, 1.5 THREAD RELIEF ON MACHINED THREADS
BREAK EDGES .016 MAX. ON MACHINED WORK
REMOVE BURRS, WELD SPLATTER & LOOSE SCALE
IN ACCORDANCE WITH ASME Y14.5M & B46.1

SHOP ORDERS

ACCT NO.	y	NO. REQD	y
DEL TO	y		
SURFACE TREATMT	-		
IDENT METHOD	TAG		
PROJECT NUMBER	N/A		
PROJECT NAME	N/A		
DWG BY	M KNOLLS	DATE	13-Jul-02
CHK BY	Jon Zbasnik	DATE	20-JUL-02
APR BY	Jon Zbasnik	DATE	20-JUL-02

SER NO. -
DATE ISSD -
DATE REQD -

ERNEST ORLANDO LAWRENCE BERKELEY NATIONAL LABORATORY
UNIVERSITY OF CALIFORNIA - BERKELEY

LHC IR FEEDBOX
CRYOGENICS
PIPING ASSEMBLY DFBXG, DFBXC

MICROFILMED:	DWG. TYPE	SHOWN ON	SCALE: ~3/32	DO NOT SCALE PRINTS
	ASSEM	-	SHEET 1 OF 10	
PATENT CLEAR:	DESIGN ACCT. NO.	CATEGORY CODE	DWG. NO.	SIZE / REV.
	Z5LCE2	LH2003	2512266	B

DWG. NO. 2512266 SIZE B REV. SH. 1

Officially Released to the LBNL Document Control Center
Released: March 5th, 2003 DCC Auth Key: 19W5X6ID4H
Downloaded by: Daniel Pulsifer at April 09, 2007 10:57:33

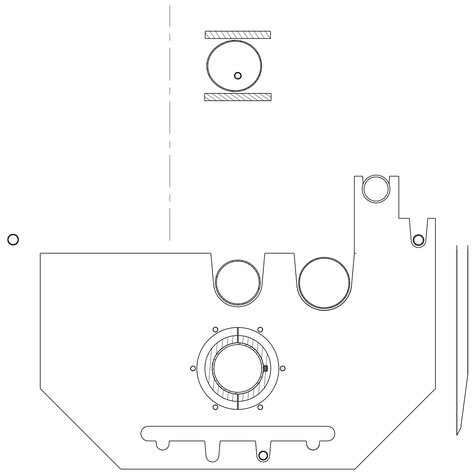

SECTION A - A
Q3 PIPE SUPPORT
SCALE 1/4
SEE NOTE 3

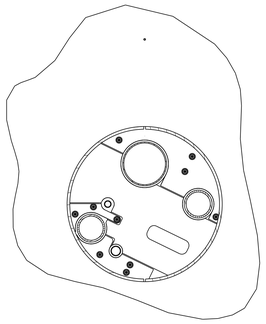

SECTION C - C
JUMPER 1 PIPE SUPPORT
SCALE 1/4
SEE NOTE 3

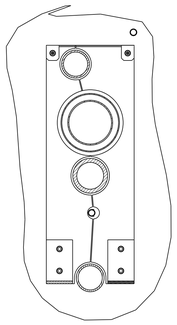

SECTION E - E
CENTER PIPE SUPPORT
SCALE 1/4
SEE NOTE 3

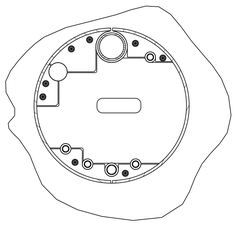

SECTION D - D
JUMPER 2 PIPE SUPPORT
SCALE 1/4
SEE NOTE 3

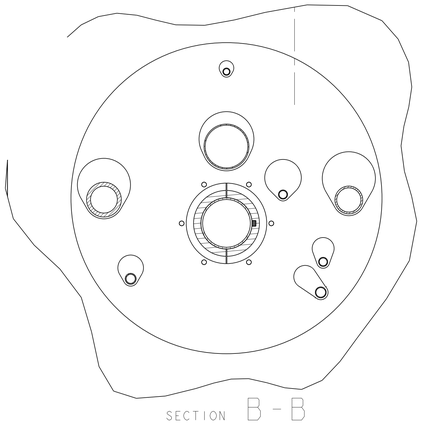

SECTION B - B
D1 PIPE SUPPORT
SCALE 1/4
SEE NOTE 3

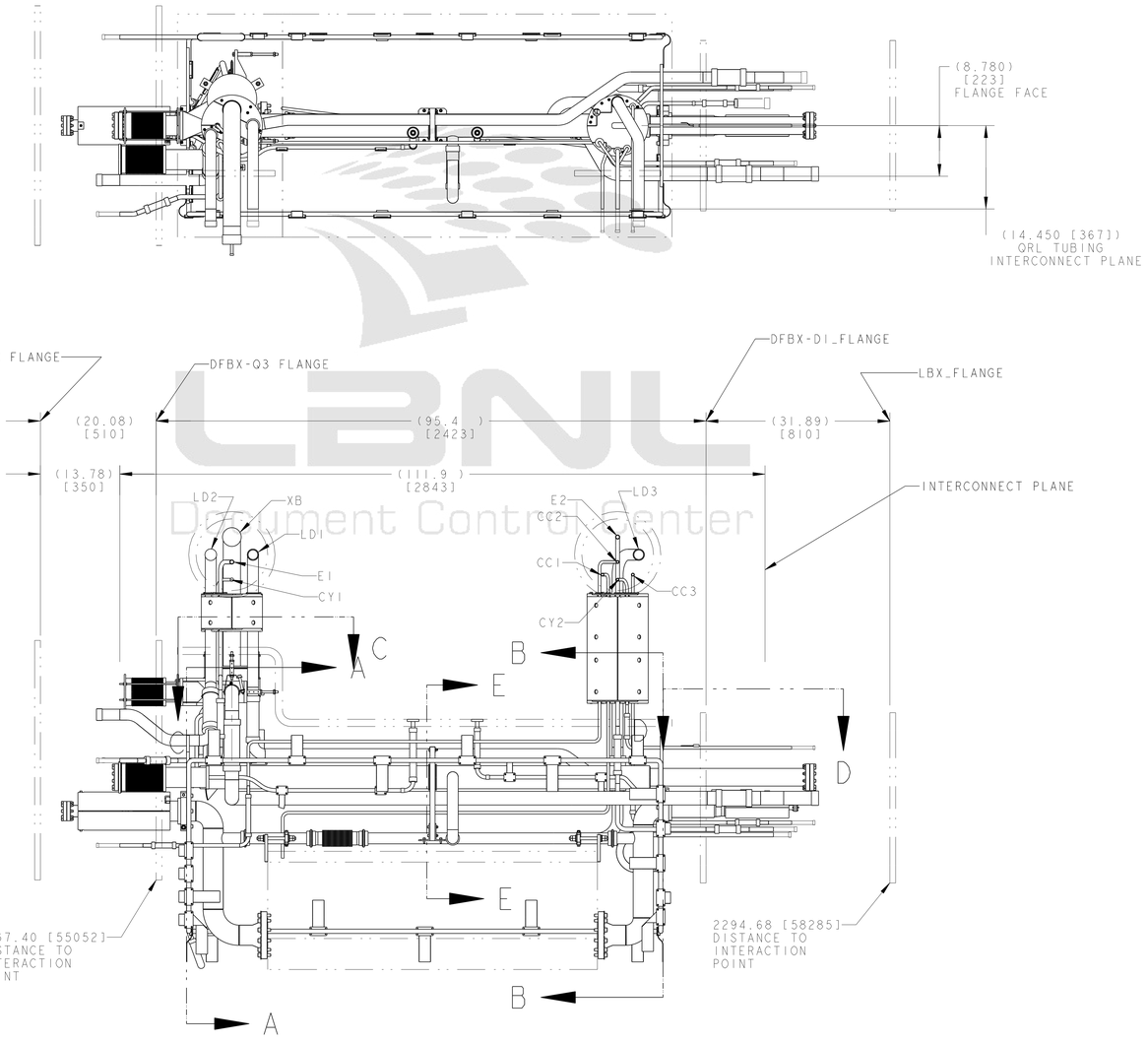

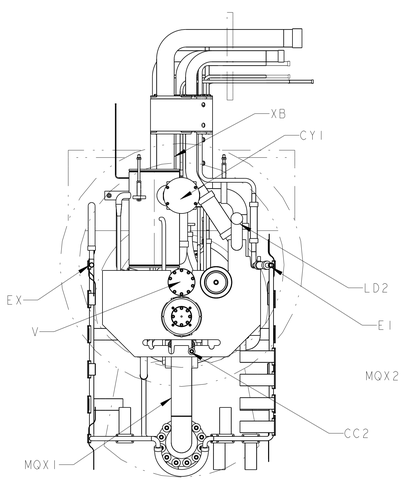

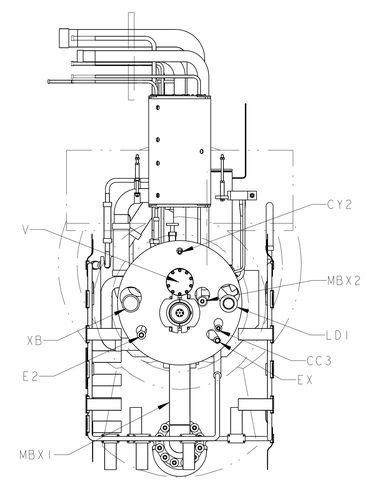

LBNL
Document Control Center

ERNEST ORLANDO LAWRENCE
BERKELEY NATIONAL LABORATORY
UNIVERSITY OF CALIFORNIA - BERKELEY

LHC IR FEEDBOX
CRYOGENICS
PIPING ASSEMBLY DFBXG, DFBXC

MICROFILMED:	DWG. TYPE	SHOWN ON	SCALE: ~3/32	DO NOT SCALE PRINTS
	ASSEM	-	SHEET 2 OF 10	
PATENT CLEAR:	DESIGN ACCT. NO.	CATEGORY CODE	DWG. NO.	SIZE / REV.
	Z5LCE2	LH2003	2512266	B

Officially Released to the LBNL Document Control Center
Released: March 5th, 2003 DCC Auth Key: 19W5X6ID4H
Downloaded by: Daniel Pulsifer at April 09, 2007 10:57:33

INSTRUMENTATION LINES

SHOWN FOR REFERENCE ONLY
NOTE: ALL WELDS MUST LEAVE TUBE INTERIOR BURR FREE

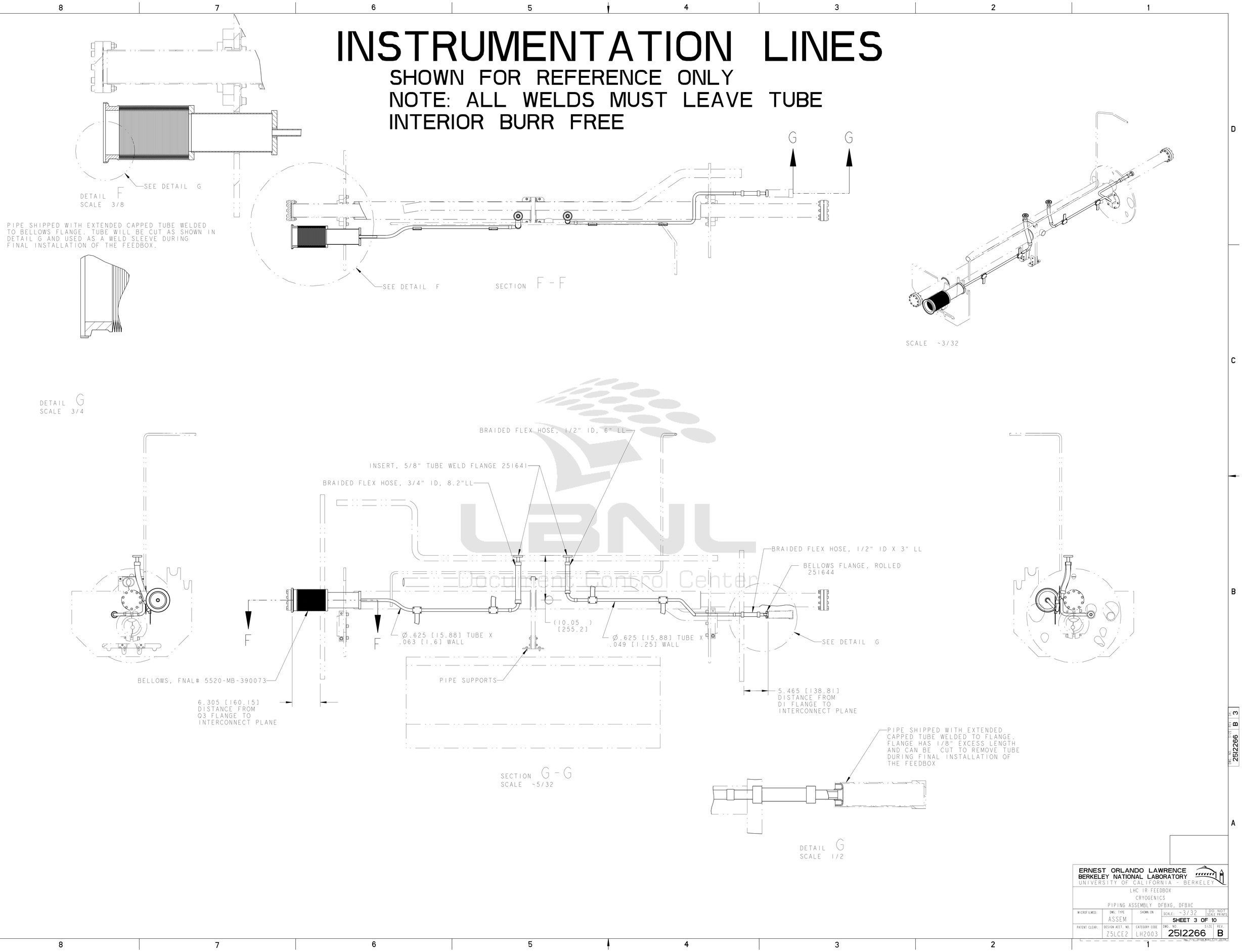

LBNL Document Control Center

ERNEST ORLANDO LAWRENCE BERKELEY NATIONAL LABORATORY
UNIVERSITY OF CALIFORNIA - BERKELEY

LHC IR FEEDBOX
CRYOGENICS
PIPING ASSEMBLY DFBXG, DFBXC

MICROFILMED:	DWG. TYPE	SHOWN ON	SCALE: ~3/32	DO NOT SCALE PRINTS
	ASSEM	-	SHEET 3 OF 10	
PATENT CLEAR:	DESIGN ACCT. NO.	CATEGORY CODE	DWG. NO.	SIZE / REV.
	Z5LCE2	LH2003	2512266	B

DWG. NO. 2512266 SIZE B REV. 3

Officially Released to the LBNL Document Control Center
Released: March 5th, 2003 DCC Auth Key: 19W5X6ID4H
Downloaded by: Daniel Pulsifer at April 09, 2007 10:57:33

LD LINES

SHOWN FOR REFERENCE ONLY

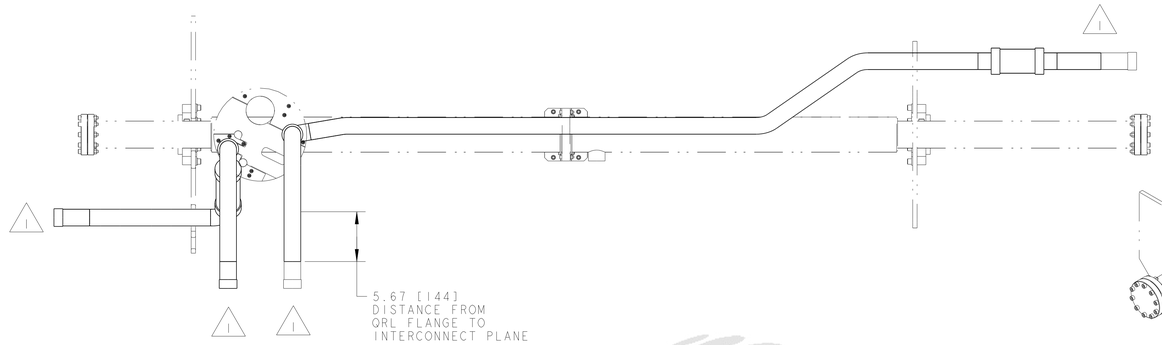

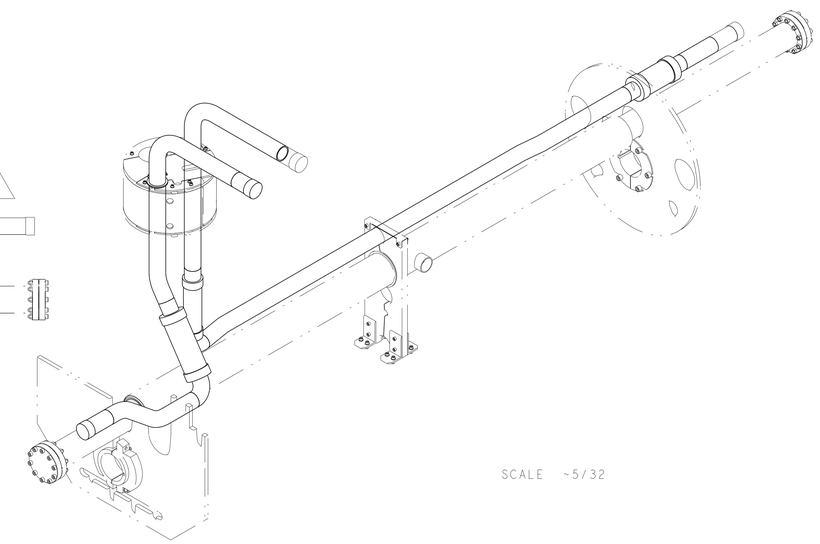

SCALE ~5/32

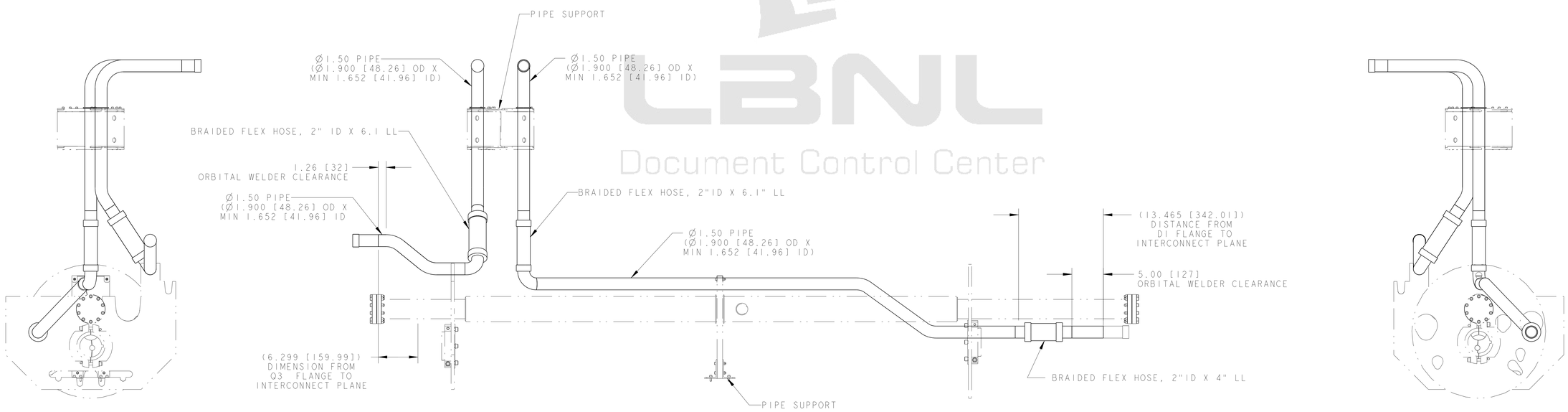

SCALE ~5/32

LBNL
Document Control Center

ERNEST ORLANDO LAWRENCE
BERKELEY NATIONAL LABORATORY
UNIVERSITY OF CALIFORNIA - BERKELEY

LHC IR FEEDBOX
CRYOGENICS
PIPING ASSEMBLY DFBXG, DFBXC

MICROFILMED:	DWG. TYPE	SHOWN ON	SCALE: ~3/32	DO NOT SCALE PRINTS
	ASSEM	-	SHEET 4 OF 10	
PATENT CLEAR:	DESIGN ACCT. NO.	CATEGORY CODE	DWG. NO.	SIZE / REV.
	Z5LCE2	LH2003	2512266	B

DWG. NO. 2512266 SHEET REV. 04 B

Officially Released to the LBNL Document Control Center
Released: March 5th, 2003 DCC Auth Key: 19W5X6ID4H
Downloaded by: Daniel Pulsifer at April 09, 2007 10:57:33

CC LINES

SHOWN FOR REFERENCE ONLY

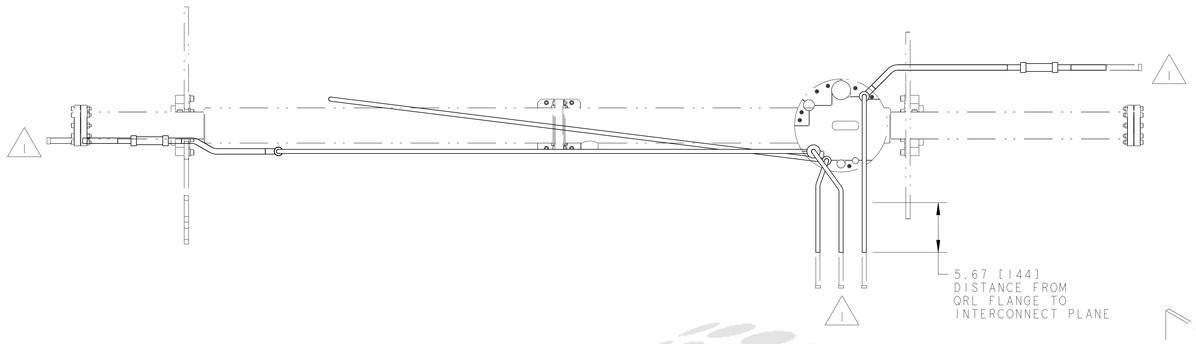

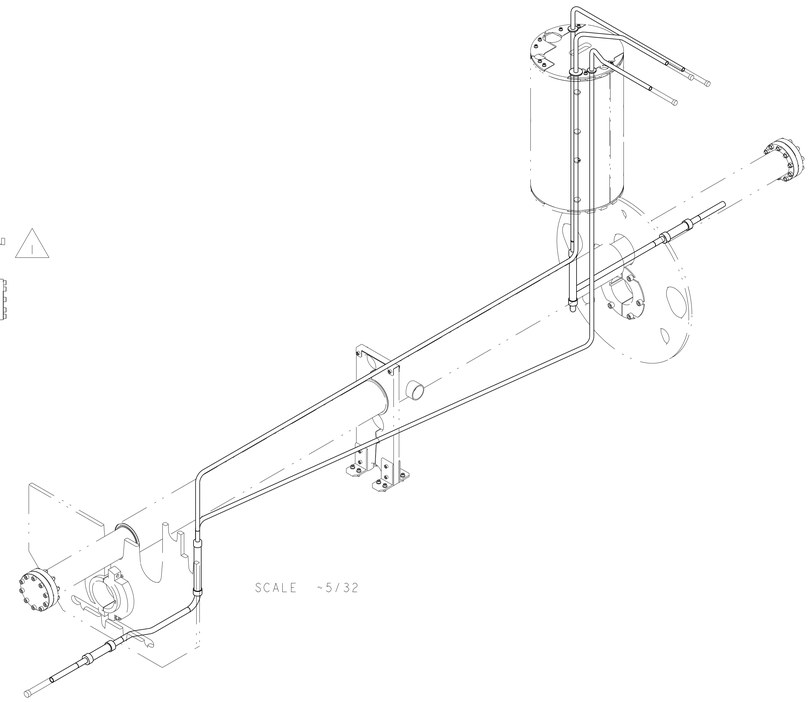

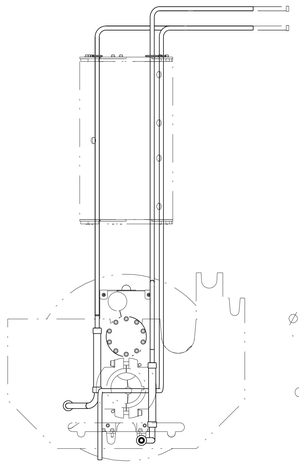

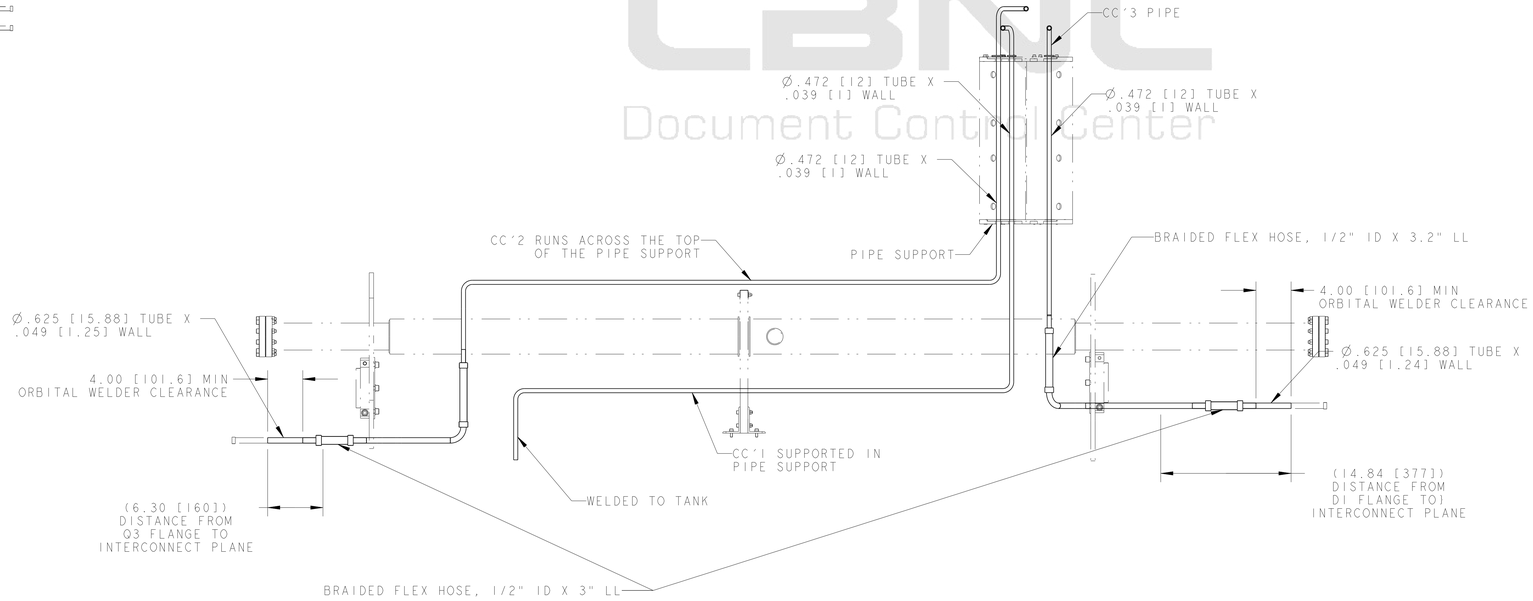

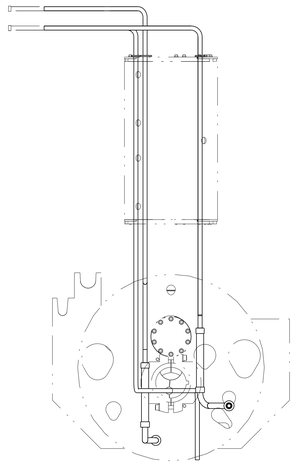

LBNL
Document Control Center

ERNEST ORLANDO LAWRENCE
BERKELEY NATIONAL LABORATORY
UNIVERSITY OF CALIFORNIA - BERKELEY

LHC IR FEEDBOX
CRYOGENICS
PIPING ASSEMBLY DFBXG, DFBXC

MICROFILMED:	DWG. TYPE	SHOWN ON	SCALE: ~3/32	DO NOT SCALE PRINTS
	ASSEM	-	SHEET 5 OF 10	
PATENT CLEAR:	DESIGN ACCT. NO.	CATEGORY CODE	DWG. NO.	SIZE / REV.
	Z5LCE2	LH2003	2512266	B

DWG. NO. 2512266 B 5

Officially Released to the LBNL Document Control Center
Released: March 5th, 2003 DCC Auth Key: 19W5X6ID4H
Downloaded by: Daniel Pulsifer at April 09, 2007 10:57:33

E1 & E2 LINES

SHOWN FOR REFERENCE ONLY

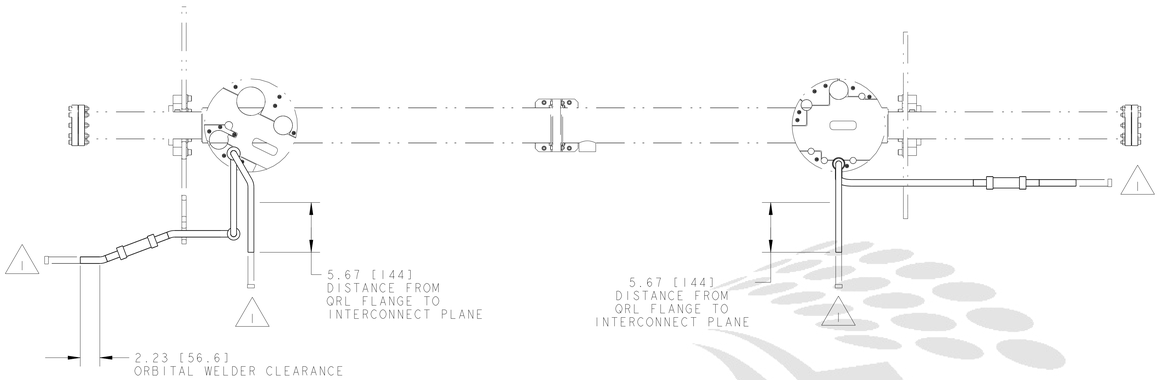

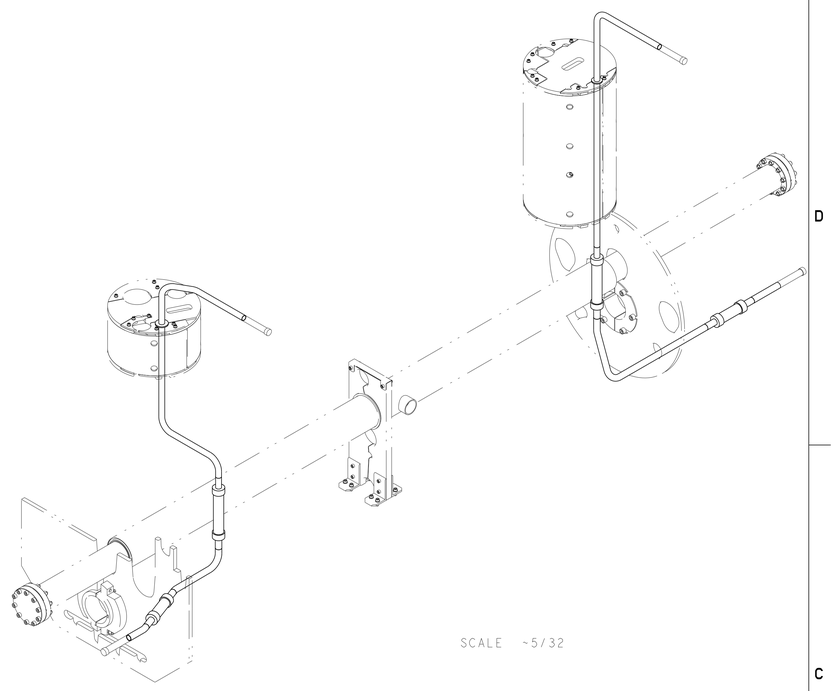

SCALE ~5/32

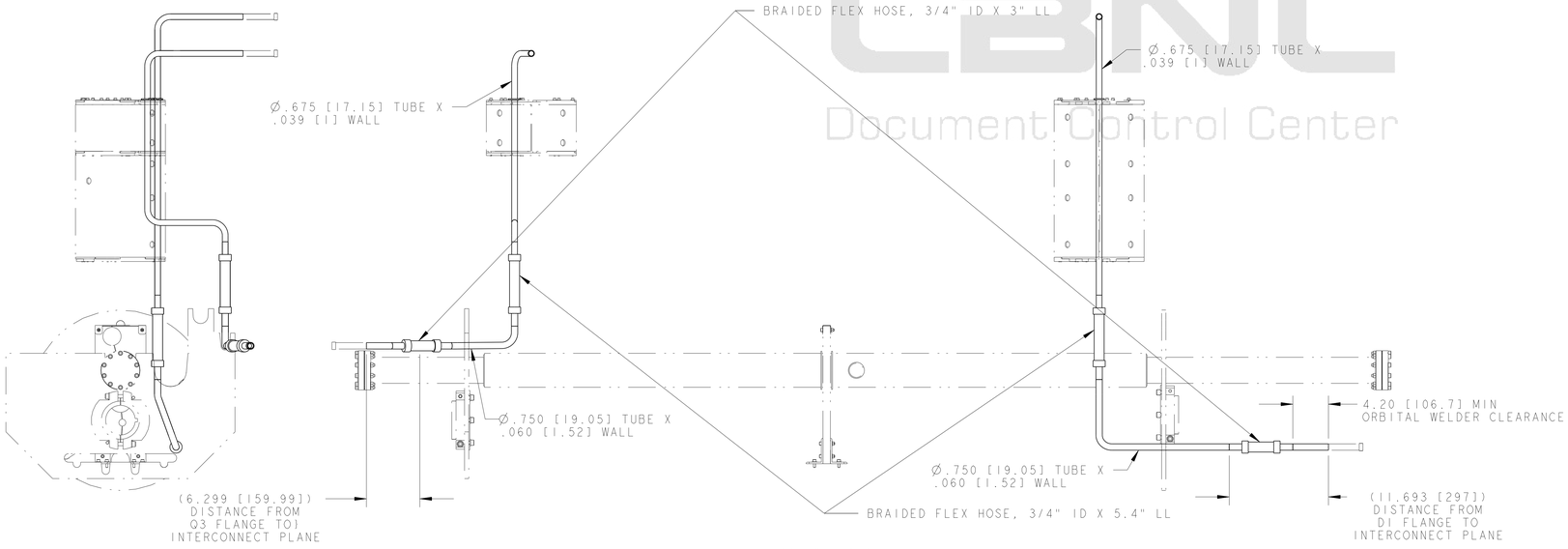

SCALE ~5/32

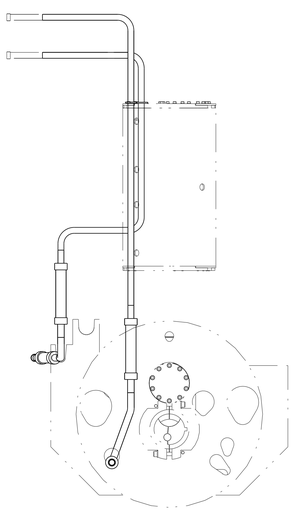

LBNL
Document Control Center

ERNEST ORLANDO LAWRENCE
BERKELEY NATIONAL LABORATORY
UNIVERSITY OF CALIFORNIA - BERKELEY

LHC IR FEEDBOX
CRYOGENICS
PIPING ASSEMBLY DFBXG, DFBXC

MICROFILMED:	DWG. TYPE	SHOWN ON	SCALE: ~3/32	DO NOT SCALE PRINTS
	ASSEM	-	SHEET 6 OF 10	
PATENT CLEAR:	DESIGN ACCT. NO.	CATEGORY CODE	DWG. NO.	SIZE / REV.
	Z5LCE2	LH2003	2512266	B

FILE: P:\CRYOGENICS\LHC\DFBX\DFBX_ASSTM_

DWG. NO. 2512266 SIZE/REV. B SHT. 6

Officially Released to the LBNL Document Control Center
Released: March 5th, 2003 DCC Auth Key: 19W5X6ID4H
Downloaded by: Daniel Pulsifer at April 09, 2007 10:57:33

EX LINE

SHOWN FOR REFERENCE ONLY

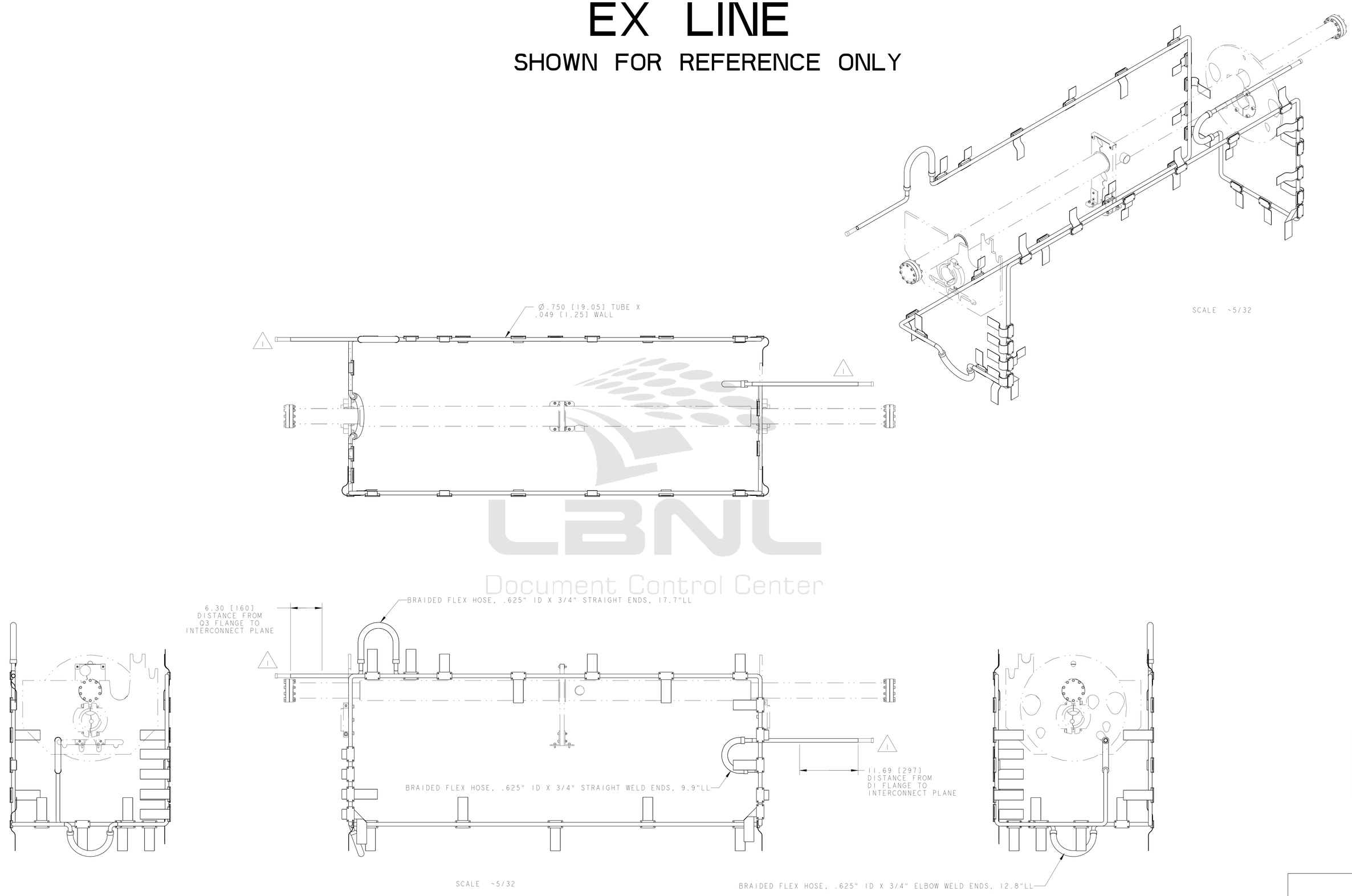

LBNL
Document Control Center

ERNEST ORLANDO LAWRENCE
BERKELEY NATIONAL LABORATORY
UNIVERSITY OF CALIFORNIA - BERKELEY

LHC IR FEEDBOX
CRYOGENICS
PIPING ASSEMBLY DFBXG, DFBXC

MICROFILMED:	DWG. TYPE	SHOWN ON	SCALE: ~3/32	DO NOT SCALE PRINTS
	ASSEM	-	SHEET 7 OF 10	
PATENT CLEAR:	DESIGN ACCT. NO.	CATEGORY CODE	DWG. NO.	SIZE / REV.
	Z5LCE2	LH2003	2512266	B

DWG. NO. 2512266 SIZE B REV. 7

Officially Released to the LBNL Document Control Center
Released: March 5th, 2003 DCC Auth Key: 19W5X6ID4H
Downloaded by: Daniel Pulsifer at April 09, 2007 10:57:33

XB & CY LINES

SHOWN FOR REFERENCE ONLY

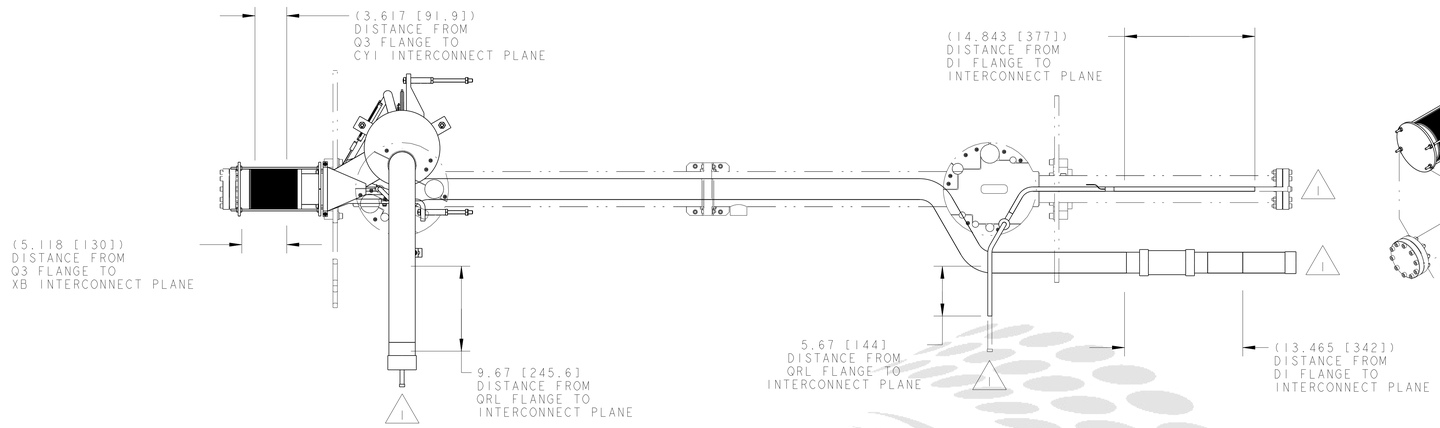

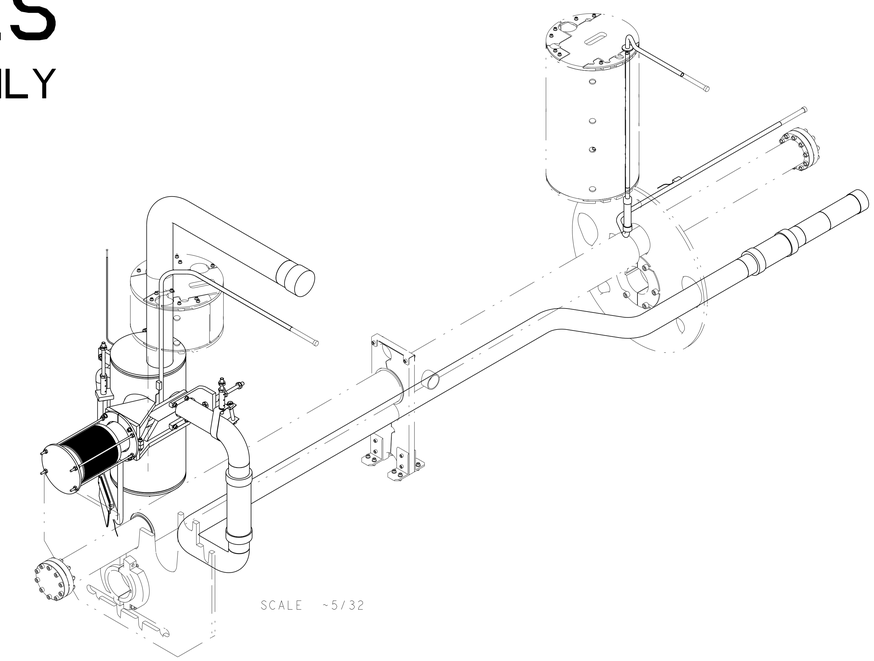

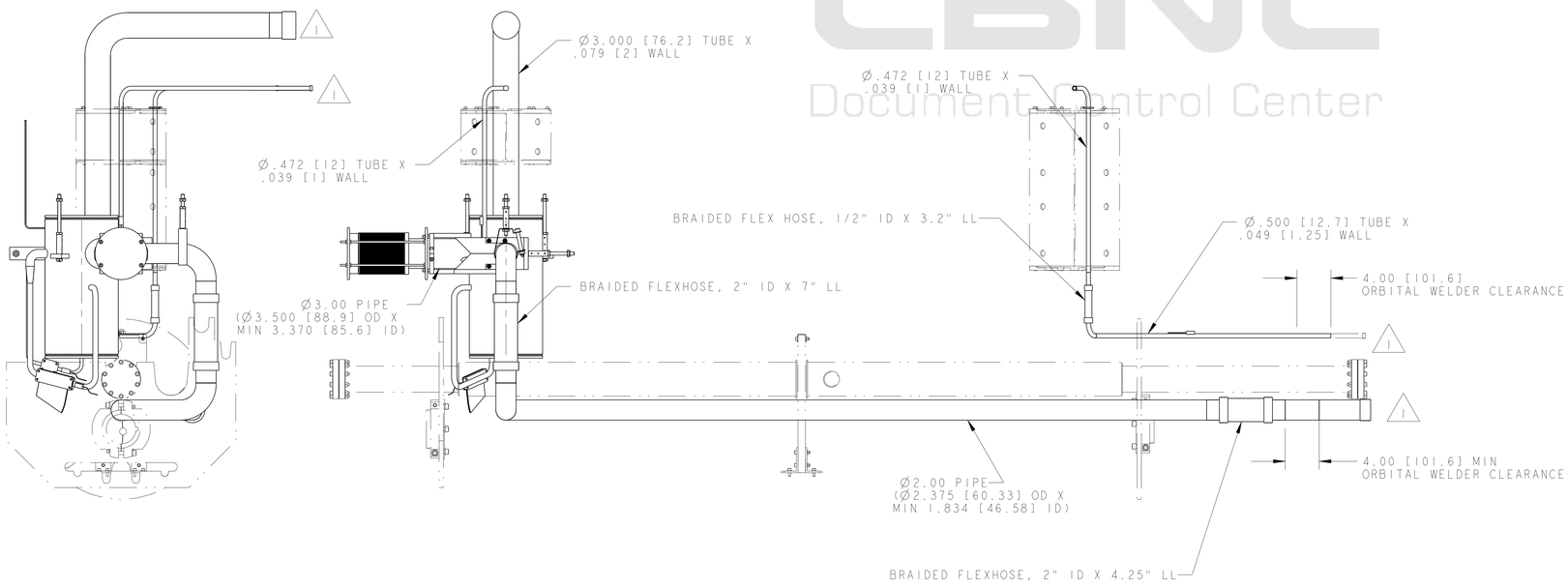

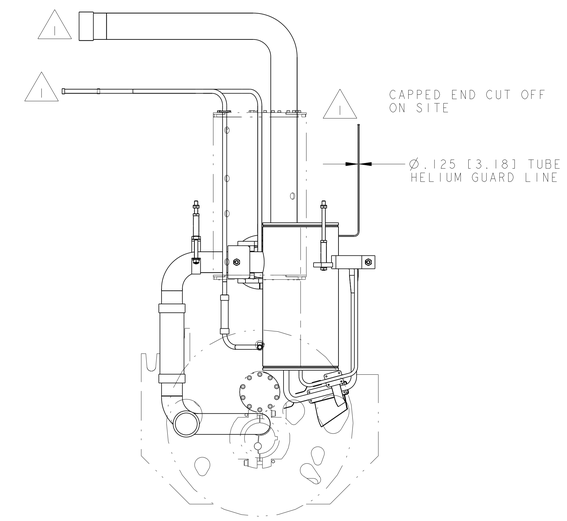

SCALE ~5/32

LBNL
Document Control Center

ERNEST ORLANDO LAWRENCE
BERKELEY NATIONAL LABORATORY
UNIVERSITY OF CALIFORNIA - BERKELEY

LHC IR FEEDBOX
CRYOGENICS
PIPING ASSEMBLY DFBXG, DFBXC

MICROFILMED:	DWG. TYPE	SHOWN ON	SCALE: ~3/32	DO NOT SCALE PRINTS
	ASSEM	-	SHEET 8 OF 10	
PATENT CLEAR:	DESIGN ACCT. NO.	CATEGORY CODE	DWG. NO.	SIZE / REV.
	Z5LCE2	LH2003	2512266	B

DWG. NO. 2512266 SIZE/REV. B SH 8

Officially Released to the LBNL Document Control Center
Released: March 5th, 2003 DCC Auth Key: 19W5X6ID4H
Downloaded by: Daniel Pulsifer at April 09, 2007 10:57:33

BEAM TUBE

SHOWN FOR REFERENCE ONLY

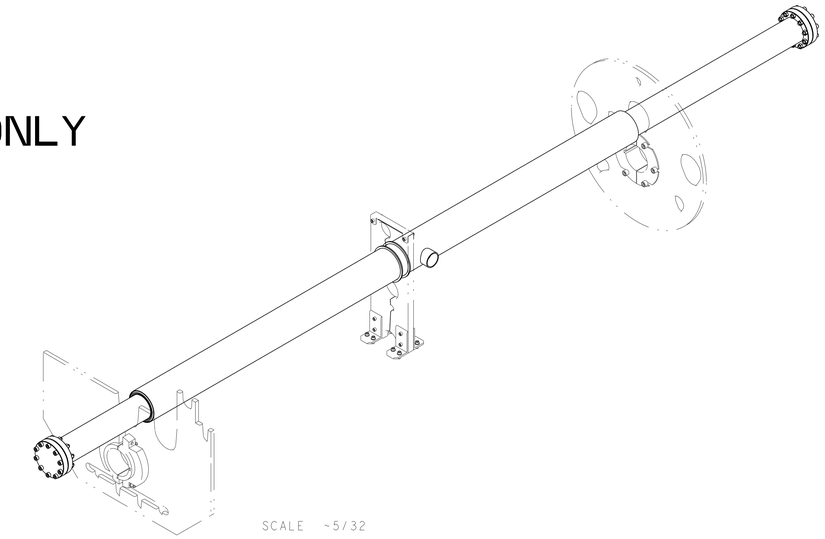

SCALE ~5/32

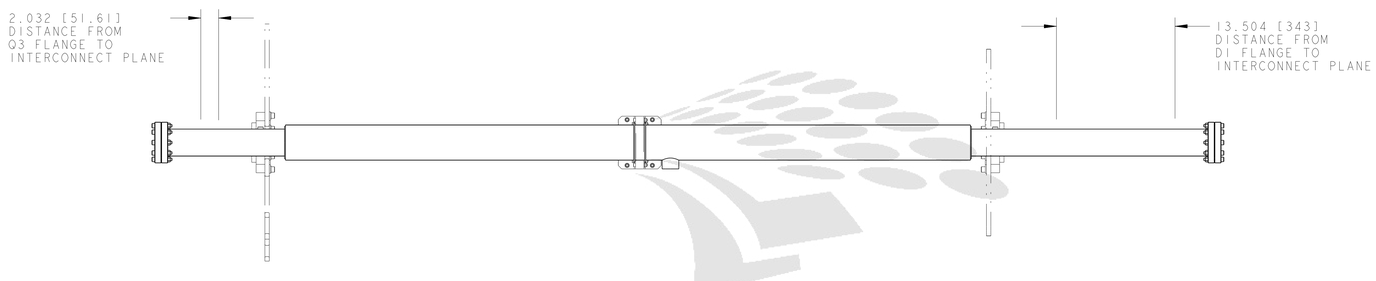

LBNL
Document Control Center

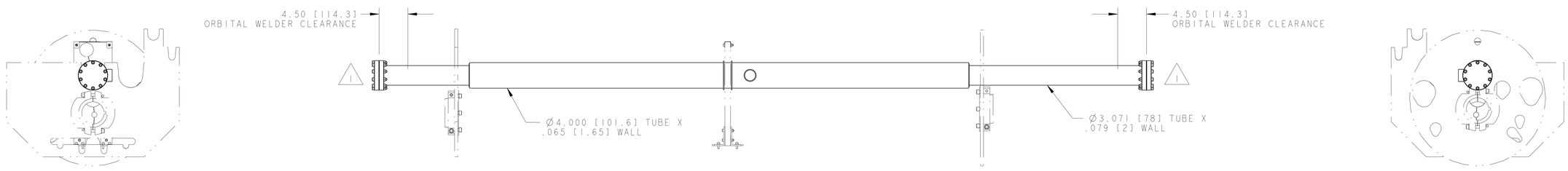

SCALE ~5/32

ERNEST ORLANDO LAWRENCE
BERKELEY NATIONAL LABORATORY
UNIVERSITY OF CALIFORNIA - BERKELEY

LHC IR FEEDBOX
CRYOGENICS
PIPING ASSEMBLY DFBXG, DFBXC

MICROFILMED:	DWG. TYPE	SHOWN ON	SCALE: ~3/32	DO NOT SCALE PRINTS
	ASSEM	-	SHEET 9 OF 10	
PATENT CLEAR:	DESIGN ACCT. NO.	CATEGORY CODE	DWG. NO.	SIZE / REV.
	Z5LCE2	LH2003	2512266	B

Officially Released to the LBNL Document Control Center
Released: March 5th, 2003 DCC Auth Key: 19W5X6ID4H
Downloaded by: Daniel Pulsifer at April 09, 2007 10:57:33

BUS DUCT ASSEMBLY

SHOWN FOR REFERENCE ONLY

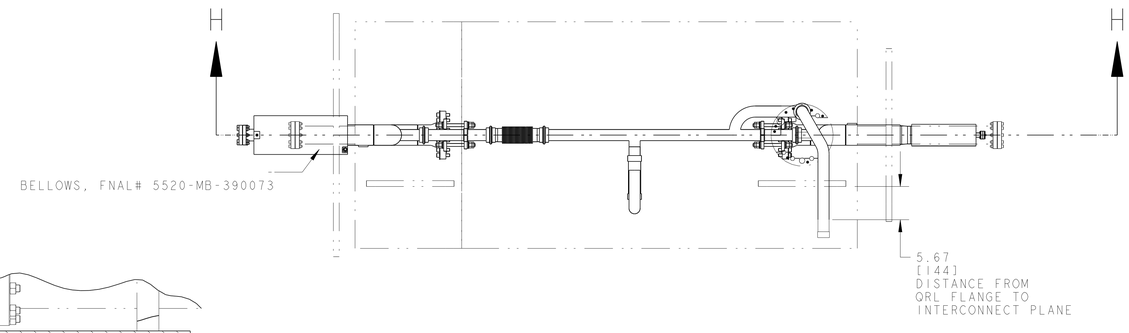

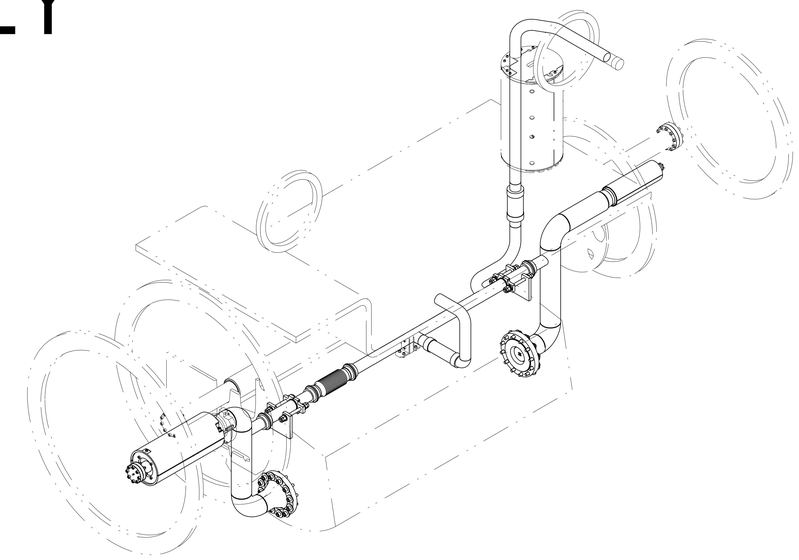

SCALE ~3/32

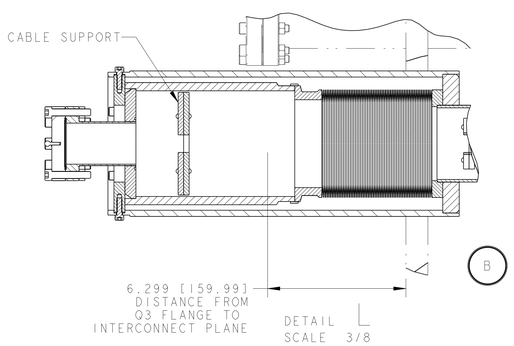

DETAIL L
SCALE 3/8

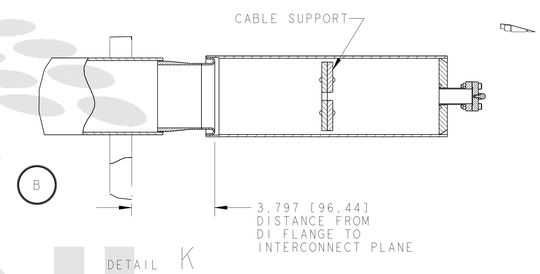

DETAIL K
SCALE 3/8

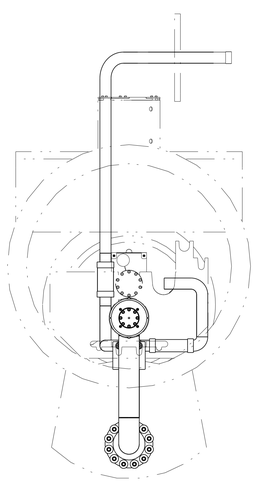

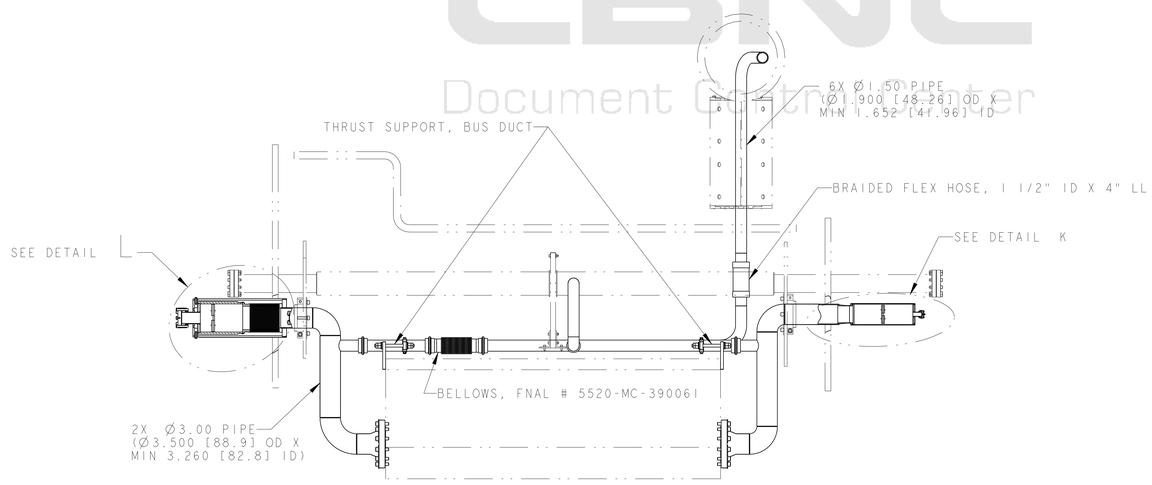

SECTION H - H
SCALE ~3/32

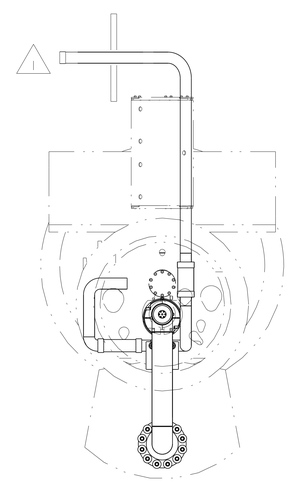

LBNL
Document Control Center

ERNEST ORLANDO LAWRENCE BERKELEY NATIONAL LABORATORY UNIVERSITY OF CALIFORNIA - BERKELEY			
LHC IR FEEDBOX CRYOGENICS PIPING ASSEMBLY DFBXG, DFBXC			
MICROFILMED:	DWG. TYPE ASSEM	SHOWN ON -	SCALE: ~3/32 DO NOT SCALE PRINTS
			SHEET 10 OF 10
PATENT CLEAR:	DESIGN ACCT. NO. Z5LCE2	CATEGORY CODE LH2003	DWG. NO. 2512266 SIZE B REV.

DWG. NO. 2512266 | B | 10

Officially Released to the LBNL Document Control Center
Released: March 5th, 2003 DCC Auth Key: 19W5X6ID4H
Downloaded by: Daniel Pulsifer at April 09, 2007 10:57:33