NOTES: (UNLESS OTHERWISE SPECIFIED)

1. THIS IS A CRYOGENIC VACUUM COMPONENT.
2. WELDING PROCEDURE: PER VENDOR SPECIFICATION WITH LBNL APPROVAL.
3. CLEANING PROCEDURE : PER VENDOR SPECIFICATION WITH LBNL APPROVAL.
4. PACKAGING AND STORAGE PROCEDURE OF THE COMPONENTS: PER VENDOR SPECIFICATION WITH LBNL APPROVAL.
5. DIMENSIONS AND TOLERANCING PER ANSI Y14.5M-1982. UNITS ARE IN INCHES [mm] UNLESS OTHERWISE SPECIFIED.
6. USE OF SULFUR OR SILICONE BEARING OILS, LUBRICANTS, OR COOLANTS ARE STRICTLY PROHIBITED.
7. USE OF RESIN OR RUBBER BONDED ABRASIVES UNDER POWER IS STRICTLY PROHIBITED. USE VITREOUS BONDED ABRASIVES ONLY.
8. VENDOR SUGGESTED CHANGES TO WELD PREPS; SUBJECT TO LBNL APPROVAL.
9. FITTINGS MAY BE USED IN PLACE OF BENDS; SUBJECT TO LBNL APPROVAL.
10. VENDOR SUGGESTED CHANGES TO TOLERANCES TO FACILITATE FABRICATION OR ASSEMBLY; SUBECT TO LBNL APPROVAL.
11. REMOVE ALL THE BURRS AND REAM THE ENDS FOR CIRCULARITY AND CLEAN ENDS.
12. TUBE END SURFACE MUST BE PERPENDICULAR TO THE TUBE AXIS WITHIN +/-.010.
13. PERFORM ACCEPTANCE TESTS PER LBNL SPECIFICATION M989. (B)
14. A MARK DESIGNATING THE INSTALLED LENGTH WILL BE UTILIZED DURING FINAL INSTALLATION OF THE FEEDBOX ASSEMBLY. MARK, SCRIBE OR ETCH THIS LOCATION IN A PERMANENT MANNER, SUBJECT TO LBNL APPROVAL, TO AN ACCURACY OF ±0.063".
15. PROVIDE A MINIMUM LENGTH OF 4.0" OF STRAIGHT, SMOOTH PIPE ON THE INDICATED SIDE OF THE INSTALLED LENGTH MARK FOR PIPE WELDING DURING FINAL INSTALLATION OF THE FEEDBOX ASSEMBLY.
16. PIPE MUST BE STRAIGHT AND SMOOTH (NO BUMPS) FOR 1.5" ON EITHER SIDE OF THE CENTER-PLANE OF THE SUPPORT. (B)
17. CAP BOTH ENDS OF PIPE TO FACILITATE ACCEPTANCE TESTS. (B)

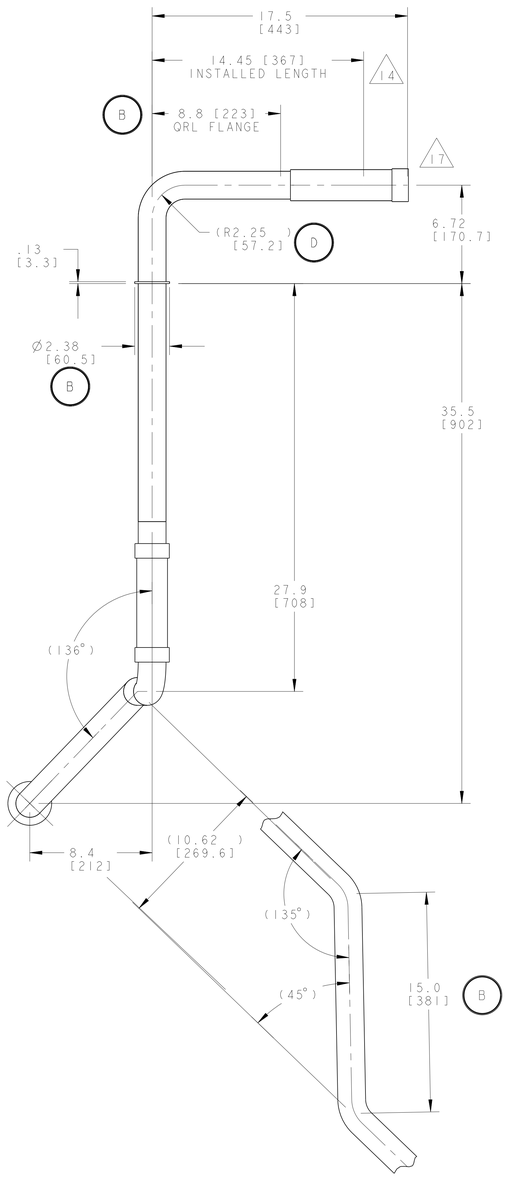

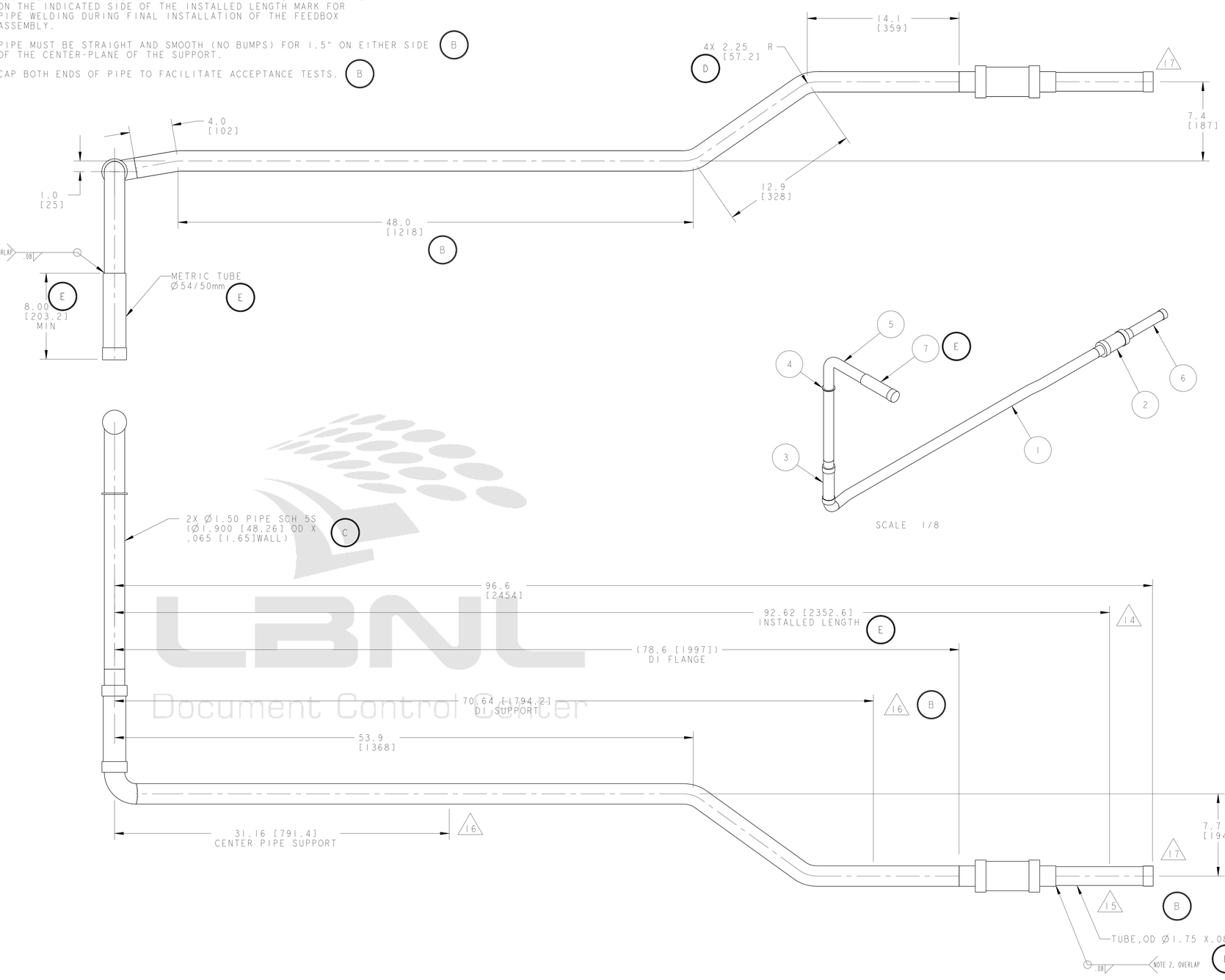

SCALE 1/8

ITEM	PART NO	REQD	DESCRIPTION	MATERIAL
7	-	1	PIPE TRANSITION STUB	SS 304L
6	-	1	TUBE, PER ASTM A249	SS 304L
5	-	1	PIPE, PER ASTM A312	SS 304L
4	-	1	SUPPORT COLLAR	SS 304L
3	-	1	BRAIDED FLEX HOSE, 2"ID X 6.1" LL	SS 300 SERIES
2	-	1	BRAIDED FLEX HOSE, 2"ID X 4" LL	SS 300 SERIES
1	-	1	PIPE, PER ASTM A312	SS 304L

REV	DWG	CHK	ZONE	DATE	CHANGES
E	RLM	JPZ		11/10/03	INSTALLED LENGTH 92.62 WAS 92.07. NEW PIPE TRANSITION STUB Ø54/50mm. TUBE Ø1.75 OD WAS PIPE Ø1.90 OD.
D	RLM	JPZ		6/9/03	RADIUS 2.25 WAS 2.5; PIPE DESIGNATION
C	RLM	-		5/28/03	SKIPPED
B	RLM	DPO		11-28-02	CHANGED FLANGE DIAMETER, REVISED DECIMAL PLACES IN TOP VIEW, CHANGED DESCRIPTION CALLOUT FOR BOM ITEMS 5 & 6, DELETED ORB WELD CLEARANCE CALLOUT, ADDED NOTE 16 CALLOUT TO VIEW, ADDED QRL FLANGE CALLOUT TO DWG VIEW, REVISED DWG NOTES 13, 16 & 17, MINOR DRAWING DIMENSIONAL CHANGES.
A	ARH	DPO		9-16-02	INITIAL RELEASE

THIRD ANGLE PROJECTION

UNLESS OTHERWISE SPECIFIED
TOLERANCES: X.X ± 0.1 FRAC. ± 1/64; X.XX ± 0.03 Angles ± 1.00°; X.XXX ± 0.010 FINISH 125 μin
DO NOT SCALE PRINT
THREADS ARE CLASS 2
CHAMFER ENDS OF ALL SCREW THREADS 30°
CUT ROUND, 1.5 THREAD RELIEF ON MACHINED THREADS
BREAK EDGES .015 MAX. ON MACHINED WORK
REMOVE BURRS, WELD SPLATTER & LOOSE SCALE
IN ACCORDANCE WITH ASME Y14.5M & B46.1

SHOP ORDERS
ACCT NO. / NO REQD / DATE ISSD / SEL TO / DATE REQD / SURFACE TREATMT / IDENT METHOD / PROJECT NUMBER N/A / PROJECT NAME N/A
DWN BY R LA MANTIA DATE 15-Dec-01
CHK BY Jon Zbasnik DATE 4-02-02
APR BY Jon Zbasnik DATE 4-02-02

ERNEST ORLANDO LAWRENCE BERKELEY NATIONAL LABORATORY
UNIVERSITY OF CALIFORNIA - BERKELEY

LHC IR FEEDBOX
CRYOGENICS
PIPE, LDI

MICROFILMED: / PATENT CLEAR: / DWG. TYPE ASSEM / DESIGN ACCT. NO. Z5LCE2 / SHOWN ON 251226 / CATEGORY CODE LH2003 / SCALE: 1/4 / SHEET 1 OF 1 / DWG. NO. 2512236 / SIZE E / REV E / DO NOT SCALE PRINTS

LBNL Document Control Center

Officially Released to the LBNL Document Control Center
Released: November 13th, 2003 DCC Auth Key: BSTCG1J1WY
Downloaded by: Daniel Pulsifer at April 09, 2007 10:57:33