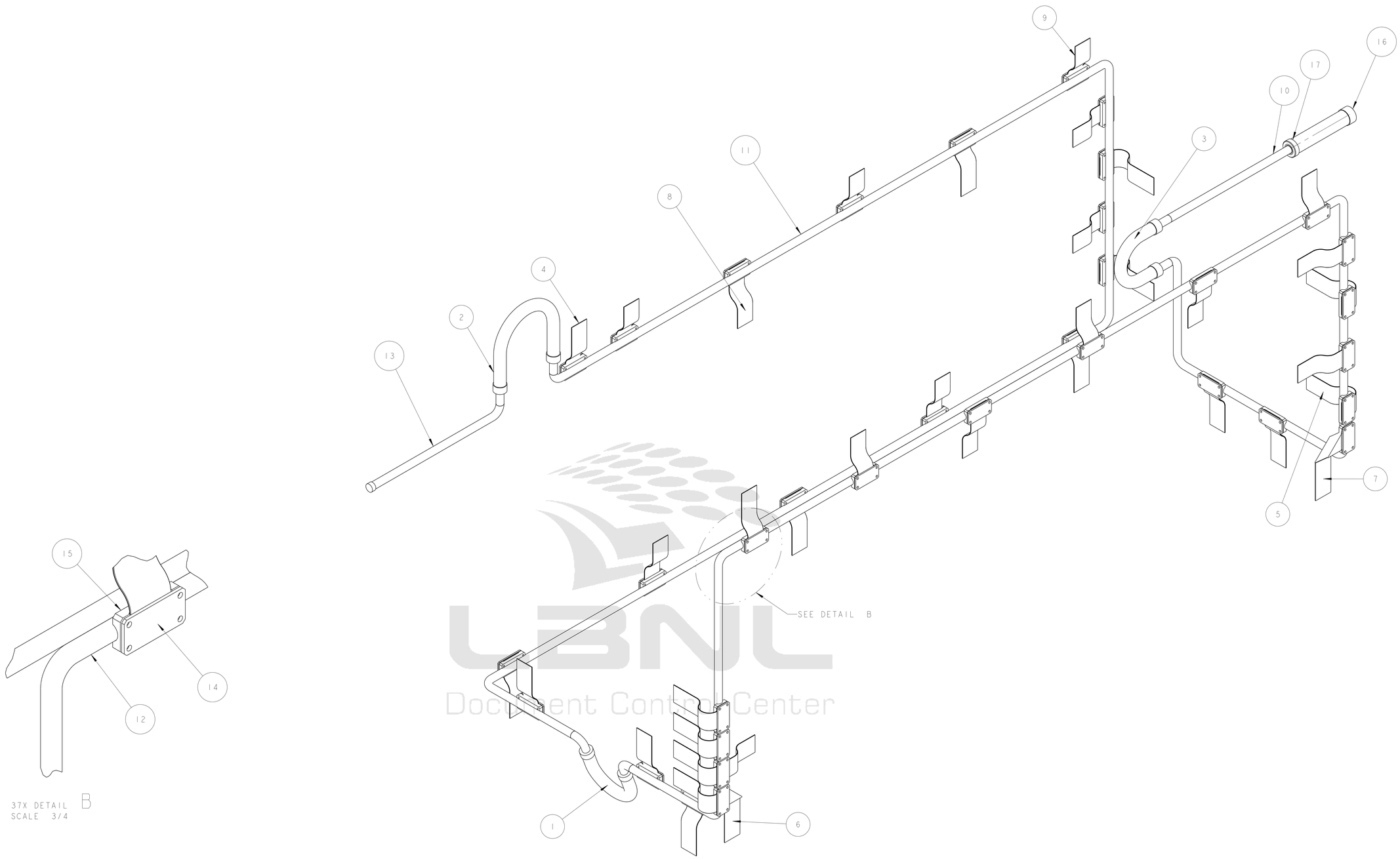

LBNL Document Control Center

NOTES: (UNLESS OTHERWISE SPECIFIED)

1. THIS IS A CRYOGENIC VACUUM COMPONENT.
2. WELDING PROCEDURE: PER VENDOR SPECIFICATION WITH LBNL APPROVAL.
3. CLEANING PROCEDURE : PER VENDOR SPECIFICATION WITH LBNL APPROVAL.
4. PACKAGING AND STORAGE PROCEDURE OF THE COMPONENTS: PER VENDOR SPECIFICATION WITH LBNL APPROVAL.
5. DIMENSIONS AND TOLERANCING PER ANSI Y14.5M-1982. UNITS ARE IN INCHES [mm] UNLESS OTHERWISE SPECIFIED.
6. USE OF SULFUR OR SILICONE BEARING OILS, LUBRICANTS, OR COOLANTS ARE STRICTLY PROHIBITED.
7. USE OF RESIN OR RUBBER BONDED ABRASIVES UNDER POWER IS STRICTLY PROHIBITED. USE VITREOUS BONDED ABRASIVES ONLY.
8. VENDOR SUGGESTED CHANGES TO WELD PREPS; SUBJECT TO LBNL APPROVAL.
9. FITTINGS MAY BE USED IN PLACE OF BENDS; SUBJECT TO LBNL APPROVAL.
10. VENDOR SUGGESTED CHANGES TO TOLERANCES TO FACILITATE FABRICATION OR ASSEMBLY; SUBECT TO LBNL APPROVAL.
11. REMOVE ALL THE BURRS AND REAM THE ENDS FOR CIRCULARITY AND CLEAN ENDS.
12. TUBE END SURFACE MUST BE PERPENDICULAR TO THE TUBE AXIS WITHIN +/-.010.
13. PERFORM ACCEPTANCE TESTS PER LBNL SPECIFICATION M989.
14. A MARK DESIGNATING THE INSTALLED LENGTH WILL BE UTILIZED DURING FINAL INSTALLATION OF THE FEEDBOX ASSEMBLY. MARK, SCRIBE OR ETCH THIS LOCATION IN A PERMANENT MANNER, SUBJECT TO LBNL APPROVAL, TO AN ACCURACY OF ±0.063".
15. PROVIDE A MINIMUM LENGTH OF 4.0" OF STRAIGHT, SMOOTH PIPE ON THE INDICATED SIDE OF THE INSTALLED LENGTH MARK FOR PIPE WELDING DURING FINAL INSTALLATION OF THE FEEDBOX ASSEMBLY.
16. PIPE MUST BE STRAIGHT AND SMOOTH (NO BUMPS) FOR 1.5" ON EITHER SIDE OF THE CENTER-PLANE OF THE SUPPORT.
17. CAP BOTH ENDS OF PIPE TO FACILITATE ACCEPTANCE TESTS.

THIRD ANGLE PROJECTION

REV	DWG	CHK	ZONE	DATE	CHANGES
D	RLM	JPZ		12/8/03	ADD MISSING DIMENSION
C	RLM	JPZ		10/16/03	ITEM 1: LL 10.8 WAS 12.8, ITEM 3: LL 10.5 WAS 9.9 11.7 WAS 10.2, 19.4 WAS 20.9, 7.65 WAS 10.65 11.7 WAS 10.7, 8.02 WAS 7.69, 5.00 WAS 6.00 ADD 20° DIM TO NOTE; ADJUST THERM STRAPS: 2.38 WAS 2.00, 5.50 WAS 6.00; 8.63 WAS 10.00, 11.75 WAS 14.00 CHANGED INSTALLED LOCATIONS: 114.3 WAS 113.4, 6.7 WAS 6.3, 12.21 WAS 11.81, 14.5 WAS 14.1, 12.36 WAS 11.96, 19.96 WAS 19.66, 12.2 WAS 11.7 ADD PIPE STUD ITEM 16 AND WELD RING ITEM 17.
B	ARH	SPV		12-05-02	ADDED SHT 5, ADDED CERN BOX TO ALL SHTS, ADDED NOTE 15 & 16 CALLOUT TO DWG VIEW, REVISED DECIMAL PLACES, SHT 3, CHANGED DESCRIPTION CALLOUT FOR BOM ITEMS 10-13, MINOR DRAWING DIMENSIONAL CHANGES, ADDED "LL" DIM TO BOM ITEMS 1, 2 & 3, REVISED DRAWING NOTE 16
A	ARH	DPO		9-17-02	INITIAL RELEASE

ITEM	PART NO	REQD	DESCRIPTION	MATERIAL
17	25M971	1	WELD RING	SS 304L
16	-	1	PIPE STUB	SS 304L
15	25M875	35	CLAMP BASE PLATE, 3/4 TUBE	COPPER, OFHC, C101
14	251427	35	CLAMP COVER	OFHC, C101
13	-	1	TUBE, PER ASTM A269	SS 304L
12	-	1	TUBE, PER ASTM A269	SS 304L
11	-	1	TUBE, PER ASTM A269	SS 304L
10	-	1	TUBE , PER ASTM A269	SS 304L
9	-	6	STANDARD BRAIDED COPPER STRAP, 1/8" X 1.00"	OFC COPPER BRAID
8	-	10	STANDARD BRAIDED COPPER STRAP, 1/8" X 1.00"	OFC COPPER BRAID
7	-	1	STANDARD BRAIDED COPPER STRAP, 1/8" X 1.00"	OFC COPPER BRAID
6	-	1	STANDARD BRAIDED COPPER STRAP, 1/8" X 1.00"	OFC COPPER BRAID
5	-	8	STANDARD BRAIDED COPPER STRAP, 1/8" X 1.00"	OFC COPPER BRAID
4	-	11	STANDARD BRAIDED COPPER STRAP, 1/8" X 1.00"	OFC COPPER BRAID
3	-	1	BRAIDED FLEX HOSE, .625" ID X 3/4" STRAIGHT WELD ENDS, 10.5"LL	SS 300 SERIES
2	-	1	BRAIDED FLEX HOSE, .625" ID X 3/4" STRAIGHT ENDS, 17.7"LL	SS 300 SERIES
1	-	1	BRAIDED FLEX HOSE, .625" ID X 3/4" ELBOW WELD ENDS, 10.8"LL	SS 300 SERIES

UNLESS OTHERWISE SPECIFIED
TOLERANCES
X.X ± 0.1 | FRAC. ± 1/64
X.XX ± 0.03 | Angles ± 1.00°
X.XXX ± 0.010 | FINISH 125 √Ra
DO NOT SCALE PRINT
THREADS ARE CLASS 2
CHAMFER ENDS OF ALL SCREW THREADS 30°
CUT ROUND, 1.5 THREAD RELIEF ON MACHINED THREADS
BREAK EDGES .016 MAX. ON MACHINED WORK
REMOVE BURRS, WELD SPLATTER & LOOSE SCALE
IN ACCORDANCE WITH ASME Y14.5M & B46.1

SHOP ORDERS
ACCT NO. | NO. REQD.
DEL TO | DATE ISSD.
DATE REQD.
SER NO.
SURFACE TREATMENT
IDENT METHOD TAG
PROJECT NUMBER N/A
PROJECT NAME N/A
DWG BY R LA MANITIA | DATE 29-Jul-02
CHK BY Jon Zbasnik | DATE 4-02-02
APP BY Jon Zbasnik | DATE 4-02-02

ERNEST ORLANDO LAWRENCE BERKELEY NATIONAL LABORATORY
UNIVERSITY OF CALIFORNIA - BERKELEY

LHC IR FEEDBOX
CRYOGENICS
PIPE, EX

MICROFILMED: | DWG. TYPE ASSEM | SHOWN ON - | SCALE: 7/32 | DO NOT SCALE PRINTS
PATENT CLEAR: | DESIGN ACCT. NO. Z5LCE2 | CATEGORY CODE LH2003 | DWG. NO. 2512126 | SIZE D | REV. D
SHEET 1 OF 5

DWG. NO. 2512126 REV. D SH. 1

Officially Released to the LBNL Document Control Center
Released: January 23rd, 2004 DCC Auth Key: ZJNDQSGTML
Downloaded by: Daniel Pulsifer at April 09, 2007 10:57:32

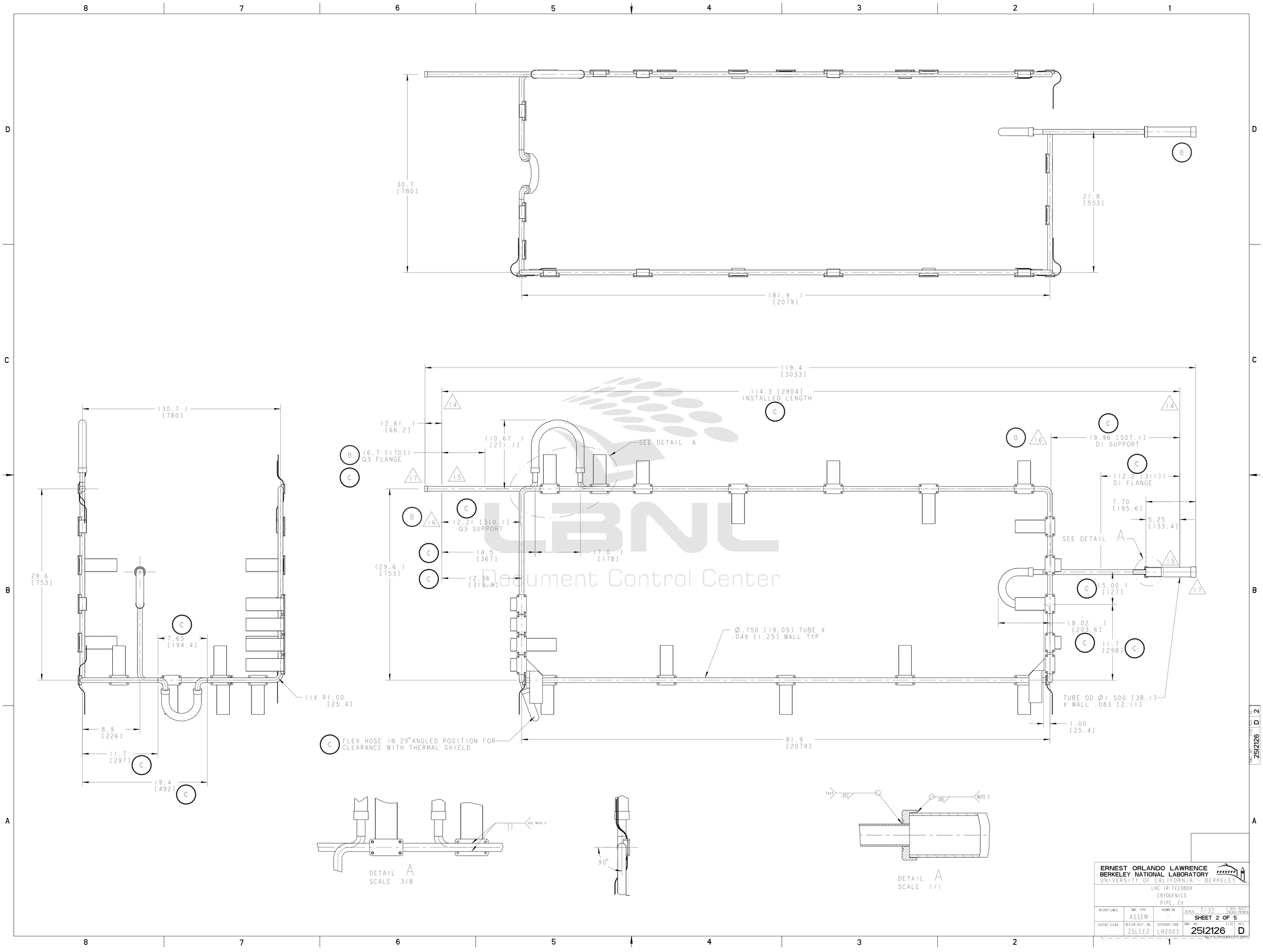

Officially Released to the LBNL Document Control Center
Released: January 23rd, 2004 DCC Auth Key: ZJNDQSGTML
Downloaded by: Daniel Pulsifer at April 09, 2007 10:57:32

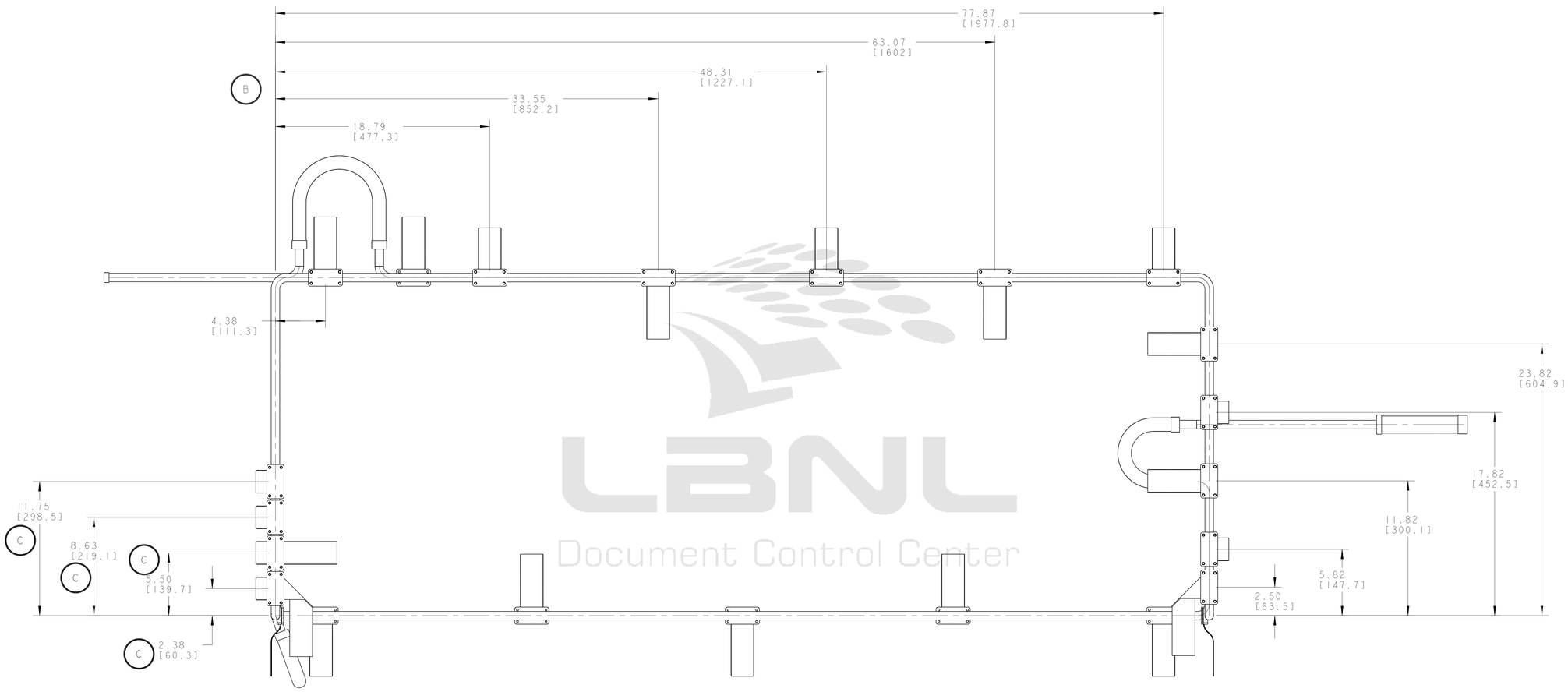

RIGHT SIDE VIEW SCALE 1/4

LBNL
Document Control Center

ERNEST ORLANDO LAWRENCE
BERKELEY NATIONAL LABORATORY
UNIVERSITY OF CALIFORNIA - BERKELEY

LHC IR FEEDBOX
CRYOGENICS
PIPE, EX

MICROFILMED:	DWG. TYPE	SHOWN ON	SCALE: 7/32	DO NOT SCALE PRINTS
	ASSEM	-	SHEET 3 OF 5	
PATENT CLEAR:	DESIGN ACCT. NO.	CATEGORY CODE	DWG. NO.	SIZE / REV.
	Z5LCE2	LH2003	2512126	D

DWG. NO. 2512126 D 3

Officially Released to the LBNL Document Control Center
Released: January 23rd, 2004 DCC Auth Key: ZJNDQSGTML
Downloaded by: Daniel Pulsifer at April 09, 2007 10:57:32

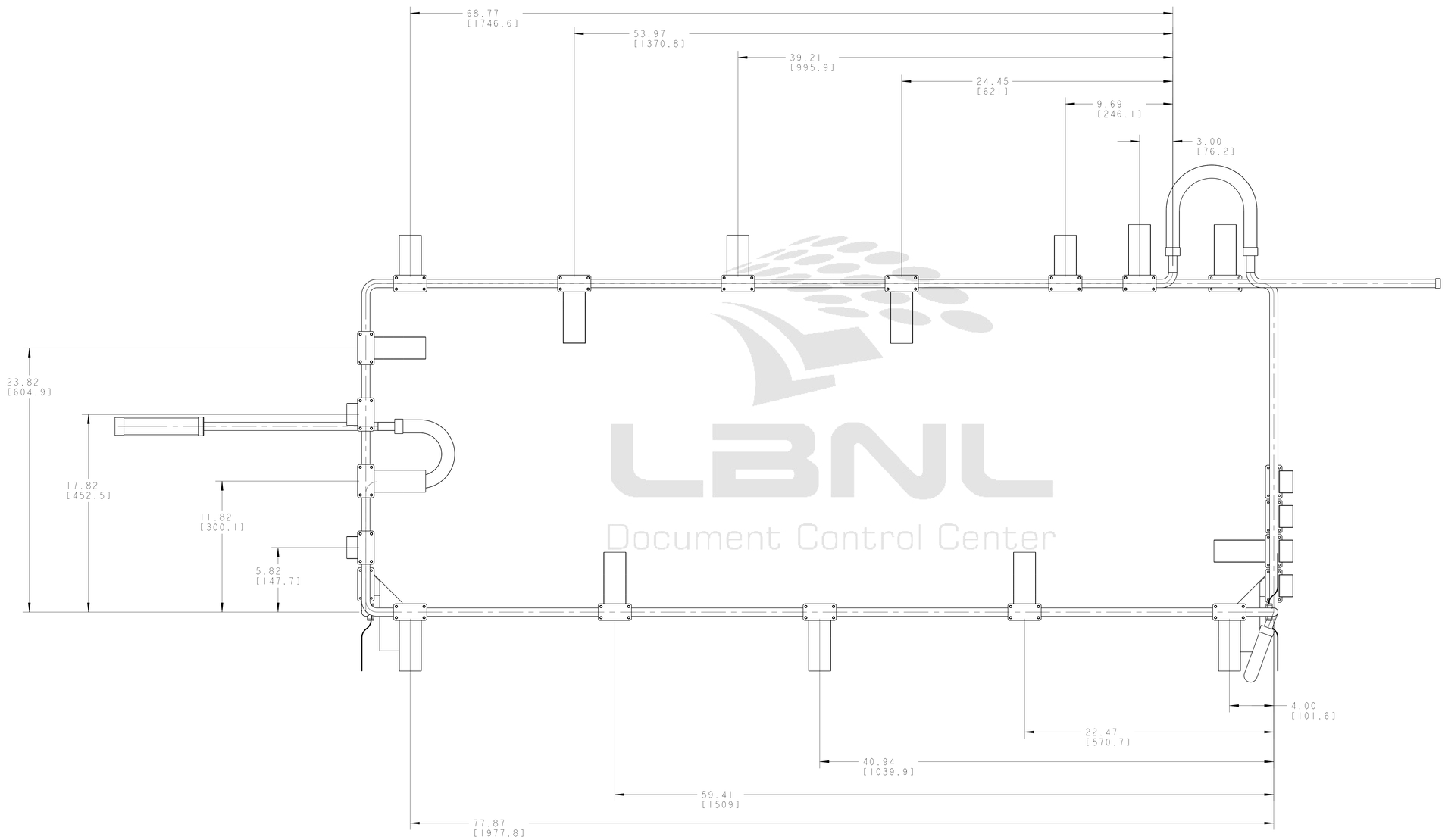

LEFT SIDE VIEW SCALE 1/4

LBNL
Document Control Center

ERNEST ORLANDO LAWRENCE
BERKELEY NATIONAL LABORATORY
UNIVERSITY OF CALIFORNIA - BERKELEY

LHC IR FEEDBOX
CRYOGENICS
PIPE, EX

MICROFILMED:	DWG. TYPE	SHOWN ON	SCALE: 7/32	DO NOT SCALE PRINTS
	ASSEM	-	SHEET 4 OF 5	
PATENT CLEAR:	DESIGN ACCT. NO.	CATEGORY CODE	DWG. NO.	SIZE / REV.
	Z5LCE2	LH2003	2512126	D

DWG. NO. 2512126 SIZE D REV. 4

Officially Released to the LBNL Document Control Center
Released: January 23rd, 2004 DCC Auth Key: ZJNDQSGTML
Downloaded by: Daniel Pulsifer at April 09, 2007 10:57:32

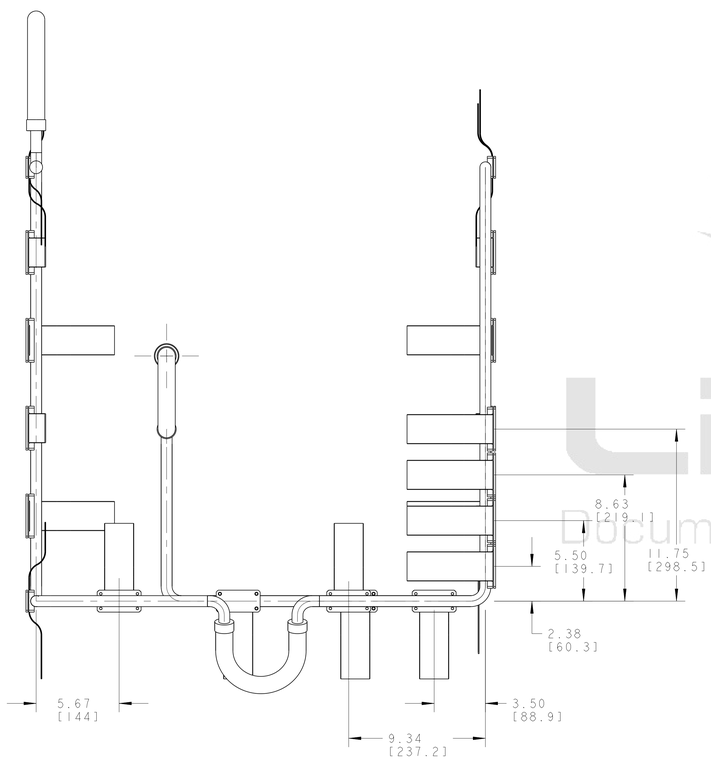

FRONT VIEW SCALE 1/4

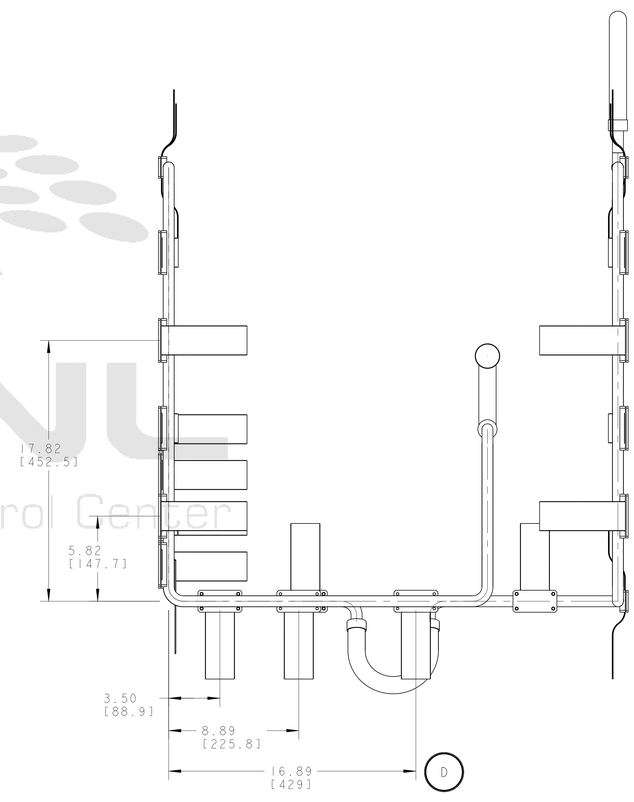

REAR VIEW SCALE 1/4

ERNEST ORLANDO LAWRENCE
BERKELEY NATIONAL LABORATORY
UNIVERSITY OF CALIFORNIA - BERKELEY

LHC IR FEEDBOX
CRYOGENICS
PIPE, EX

MICROFILMED:	DWG. TYPE	SHOWN ON	SCALE: 1/32	DO NOT SCALE PRINTS
	ASSEM	-	SHEET 5 OF 5	
PATENT CLEAR:	DESIGN ACCT. NO.	CATEGORY CODE	DWG. NO.	SIZE / REV.
	Z5LCE2	LH2003	2512126	D

DWG. NO. 2512126 SHEET 5 OF 5 D

LBNL Document Control Center

Officially Released to the LBNL Document Control Center
Released: January 23rd, 2004 DCC Auth Key: ZJNDQSGTML

Downloaded by: Daniel Pulsifer at April 09, 2007 10:57:32