DESCRIPTION	MATERIAL	MAT. LOCATION
ROUN BAR	AL 6061-T6	-

NOTES: UNLESS OTHERWISE SPECIFIED,

1. DIMENSIONS AND TOLERANCING PER ANSI Y14.5M-1982
   UNITS ARE IN INCHES [mm] UNLESS OTHERWISE SPECIFIED.
2. CLEAR ANODIZE AFTER MACHINING
3. PROTECT FINISHED PART BY BAGGING OR SIMILAR METHOD TO
   PROTECT AND MAINTAIN CLEANLINESS DURING SHIPMENT
   AND STORAGE.

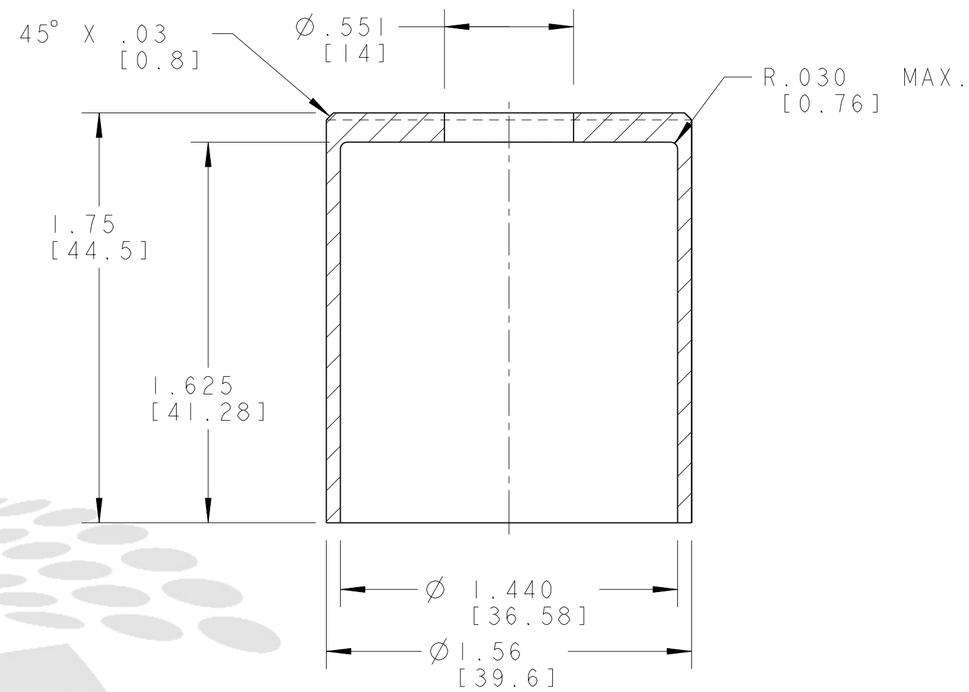

SECTION A - A

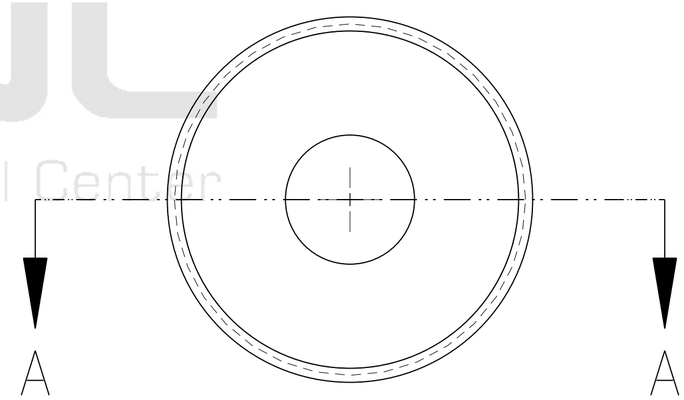

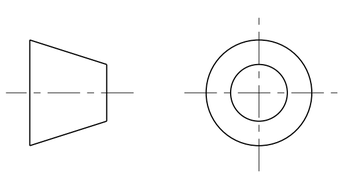

THIRD ANGLE PROJECTION

REV	DWG	CHK	ZONE	DATE	CHANGES
A	ARH	DPO		9-16-02	INITIAL RELEASE

UNLESS OTHERWISE SPECIFIED

TOLERANCES		
	X.X ± 0.1	FRAC. ± 1/64
	X.XX ± 0.03	Angles ± 1.00°
	X.XXX ± 0.010	FINISH 125 √(µin)

DO NOT SCALE PRINT

THREADS ARE CLASS 2
CHAMFER ENDS OF ALL SCREW TREADS 30°
CUT ROUND, 1.5 THREAD RELIEF ON MACHINED THREADS
BREAK EDGES .016 MAX. ON MACHINED WORK
REMOVE BURRS, WELD SPLATTER & LOOSE SCALE
IN ACCORDANCE WITH ASME Y14.5M & B46.1

SHOP ORDERS

SER NO.	-		
ACCT NO.		NO. REQD	DATE ISSD -
DEL TO			DATE REQD -
SURFACE TREATMT	-		
IDENT METHOD	TAG		
PROJECT NUMBER	N/A		
PROJECT NAME	N/A		
DWG BY	A. ZACHOSZCZ		DATE 09-Oct-01
CHK BY	Jon Zbasnik		DATE 4-02-02
APR BY	Jon Zbasnik		DATE 4-02-02

ERNEST ORLANDO LAWRENCE
BERKELEY NATIONAL LABORATORY
UNIVERSITY OF CALIFORNIA - BERKELEY

LHC IR FEEDBOX
MAJOR ASSEMBLY
HTS LEAD WASHER GUIDE 1

MICROFILMED:	DWG. TYPE	SHOWN ON	SCALE: 2/1	DO NOT SCALE PRINTS
	PART		SHEET 1 OF 1	

PATENT CLEAR:	DESIGN ACCT. NO.	CATEGORY CODE	DWG. NO.	SIZE	REV.
	Z5LCE2	LH2001	2511913		A

Dwg. File: 251191 Model File: HTS_LEAD_WASHER_GUIDE_2

Rev. 17-Apr-1999 J. K. Oakwell

DWG. NO. 2511913 SIZE A REV. A SH. 1

LBNL Document Control Center

Officially Released to the LBNL Document Control Center
Released: October 1st, 2002 DCC Auth Key: 4C1VRFKGUG

Downloaded by: Daniel Pulsifer at April 09, 2007 10:57:32