DWG. NO.	SIZE	REV.	SH.
2511634	A	1	

ITEM	PART NO	REQD	DESCRIPTION	MATERIAL
5	-	2	SS-8-VCR-1-6 CAJON MALE FITTING	SS
4	251186	1	TOP PLATE, LBX DIAGNOSTIC	304L STAINLESS
3	251366	2	CERAMASEAL, 7 PIN ASSEMBLY	304L STAINLESS
2	251185	1	BODY, LBX DIAGNOSTIC	304L STAINLESS
1	16013-01-W	1	CERAMASEAL, 19 PIN CONNECTOR	-

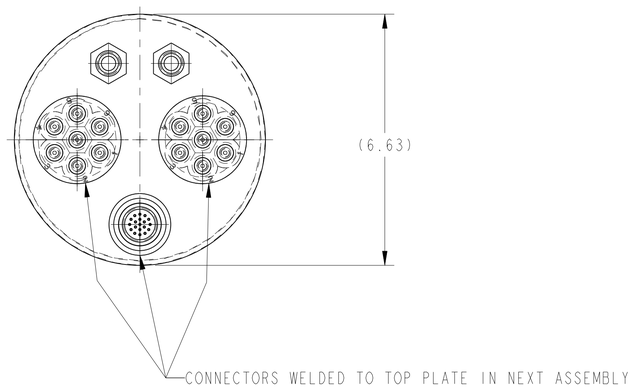

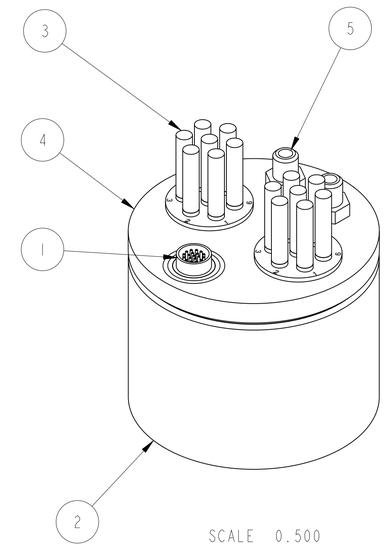

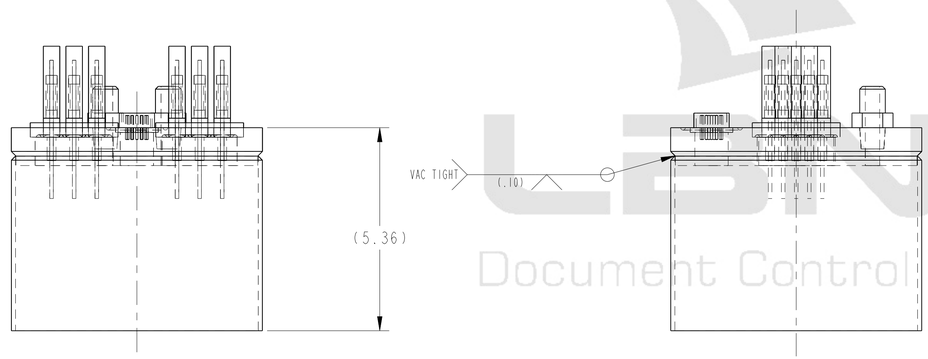

NOTES: UNLESS OTHERWISE SPECIFIED,

1. DIMENSIONS AND TOLERANCING PER ANSI Y14.5M-1982 UNITS ARE IN INCHES UNLESS OTHERWISE SPECIFIED.
2. USE OF SULFUR OR SILICONE BEARING OILS, LUBRICANTS, OR COOLANTS ARE STRICTLY PROHIBITED
3. USE OF RESIN OR RUBBER BONDED ADRASIVES UNDER POWER IS STRICTLY PROHIBITED. USE VITREOUS BONDED ABRASIVES ONLY.
4. VENDOR WELD SPECIFICATION SUBJECT TO LBNL APPROVAL.
4. CLEAN AFTER WELDING PER VENDOR SPECIFICATION; SUBJECT TO LBNL APPROVAL.
5. PROTECT FINISHED PART BY BAGGING OR SIMILAR METHOD TO PROTECT AND MAINTAIN CLEANLINESS DURING SHIPMENT AND STORAGE.
6. ESTIMATED WEIGHT = 13 LBS

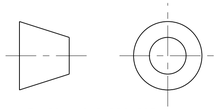

THIRD ANGLE PROJECTION

REV	DWG	CHK	ZONE	DATE	CHANGES
A	RLM	DPO		10-4-02	INITIAL RELEASE

UNLESS OTHERWISE SPECIFIED

TOLERANCES		
	X.X ± 0.1	FRAC. ± 1/64
	X.XX ± 0.03	Angles ± 1.00°
	X.XXX ± 0.010	FINISH 125 √ (μin)

DO NOT SCALE PRINT

THREADS ARE CLASS 2
CHAMFER ENDS OF ALL SCREW TREADS 30°
CUT ROUND, 1.5 THREAD RELIEF ON MACHINED THREADS
BREAK EDGES .016 MAX. ON MACHINED WORK
REMOVE BURRS, WELD SPLATTER & LOOSE SCALE
IN ACCORDANCE WITH ASME Y14.5M & B46.1

SHOP ORDERS

SER NO.	-		
ACCT NO.		NO. REQD	DATE ISSD -
DEL TO			DATE REQD -
SURFACE TREATMT	-		
IDENT METHOD	TAG		
PROJECT NUMBER	N/A		
PROJECT NAME	N/A		
DWG BY	M. KNOLLS		DATE 24-Aug-01
CHK BY	Jon Zbasnik		DATE 21-Apr-02
APR BY	Jon Zbasnik		DATE 21-Apr-02

ERNEST ORLANDO LAWRENCE BERKELEY NATIONAL LABORATORY
UNIVERSITY OF CALIFORNIA - BERKELEY

LHC IR FEEDBOX
ELECTRICAL
LBX DIAGNOSTIC ASSY

MICROFILMED:	DWG. TYPE	SHOWN ON	SCALE: 0.500	DO NOT SCALE PRINTS
	ASSEM		SHEET 1 OF 1	
PATENT CLEAR:	DESIGN ACCT. NO.	CATEGORY CODE	DWG. NO.	SIZE / REV.
	Z5LCE2	LH2004	2511634	A

LBNL Document Control Center

Officially Released to the LBNL Document Control Center
Released: October 1st, 2002 DCC Auth Key: 5BPMW14H6K
Downloaded by: Daniel Pulsifer at April 09, 2007 10:57:31