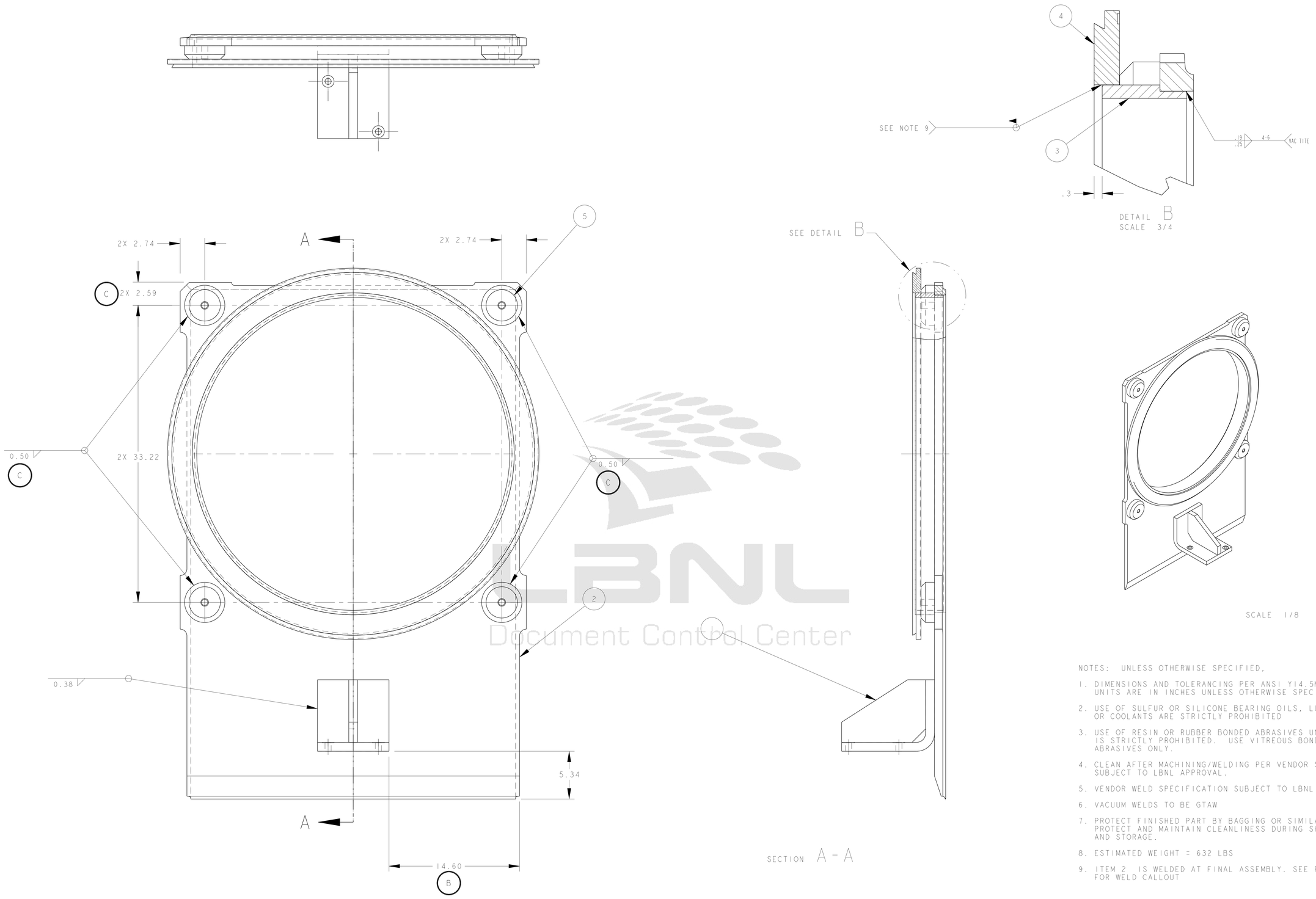

LBNL Document Control Center

NOTES: UNLESS OTHERWISE SPECIFIED,

1. DIMENSIONS AND TOLERANCING PER ANSI Y14.5M-1982 UNITS ARE IN INCHES UNLESS OTHERWISE SPECIFIED.
2. USE OF SULFUR OR SILICONE BEARING OILS, LUBRICANTS, OR COOLANTS ARE STRICTLY PROHIBITED
3. USE OF RESIN OR RUBBER BONDED ABRASIVES UNDER POWER IS STRICTLY PROHIBITED. USE VITREOUS BONDED ABRASIVES ONLY.
4. CLEAN AFTER MACHINING/WELDING PER VENDOR SPECIFICATION: SUBJECT TO LBNL APPROVAL.
5. VENDOR WELD SPECIFICATION SUBJECT TO LBNL APPROVAL.
6. VACUUM WELDS TO BE GTAW
7. PROTECT FINISHED PART BY BAGGING OR SIMILAR METHOD TO PROTECT AND MAINTAIN CLEANLINESS DURING SHIPMENT AND STORAGE.
8. ESTIMATED WEIGHT = 632 LBS
9. ITEM 2 IS WELDED AT FINAL ASSEMBLY. SEE FINAL ASSEMBLY FOR WELD CALLOUT

ITEM	PART NO	REQD	DESCRIPTION	MATERIAL
5	251181	4	MOUNTING PAD	304L STAINLESS
4	251127	1	Q3 FLANGE	304L SS
3	251128	1	Q3 PLATE FLANGE EXTENSION	304L SS
2	251126	1	Q3 FRONT PLATE	304L SS
1	251165	1	JACK PAD WELDMENT	-

REV	DWG	CHK	ZONE	DATE	CHANGES
C	RLM	JPZ		2/11/04	PAD LOCATION 2.59 WAS 2.97 WELD SIZE .50 WAS .38
B	RLM	JPZ		9/9/03	CHANGED Q3 PLATE DETAIL; 14.60 WAS 15.35
A	RLM	DPO		10/4/02	INITIAL RELEASE

THIRD ANGLE PROJECTION

UNLESS OTHERWISE SPECIFIED
TOLERANCES: X.X ± 0.1 FRAC. ± 1/64; X.XX ± 0.03 Angles ± 1.00°; X.XXX ± 0.010 FINISH 125/
DO NOT SCALE PRINT
THREADS ARE CLASS 2
CHAMFER ENDS OF ALL SCREW TREADS 30°
CUT ROUND, 1.5 THREAD RELIEF ON MACHINED THREADS
BREAK EDGES .016 MAX. ON MACHINED WORK
REMOVE BURRS, WELD SPLATTER & LOOSE SCALE
IN ACCORDANCE WITH ASME Y14.5M & B46.1

SHOP ORDERS
ACCT NO. | NO. REQD | DATE ISSD | DEL TO | DATE REQD
SURFACE TREATMT | IDENT METHOD TAG
PROJECT NUMBER N/A
PROJECT NAME N/A
DWG BY M. KNOLLS DATE 14-Aug-01
CHK BY JON ZBASNIK DATE 15-FEB-02
APR BY JON ZBASNIK DATE 15-FEB-02

ERNEST ORLANDO LAWRENCE BERKELEY NATIONAL LABORATORY
UNIVERSITY OF CALIFORNIA - BERKELEY
LHC IR FEEDBOX
VACUUM
Q3 PLATE ASSY

MICROFILMED: | DWG. TYPE ASSEM | SHOWN ON | SCALE: 1/4 | DO NOT SCALE PRINTS
PATENT CLEAR: | DESIGN ACCT. NO. Z5LCE2 | CATEGORY CODE LH2002 | SHEET 1 OF 1 | DWG. NO. 2511296 | SIZE C | REV. C

DWG. NO. 2511296 SIZE C REV. 1 SH.

Officially Released to the LBNL Document Control Center
Released: March 31st, 2004 DCC Auth Key: XEFG27C3ZG
Downloaded by: Daniel Pulsifer at April 09, 2007 10:57:30