DWG. NO.	SIZE	REV.	SH.
2510954	A	1	

ITEM	PART NO	REQD	DESCRIPTION	MATERIAL
5	-	16	WASHER, M5	SS 18-8
4	-	16	SCH, M5X.8, 15LG, SILVER PLATED	SS 18-8
3	251381	2	SUPPORT PLATE	NEMA G10
2	251382	2	RETAINER PLATE ASSEMBLY	NEMA G10
1	251445	2	QRL ENCLOSURE, SHORT, IP 1, 2&8	NEMA G10

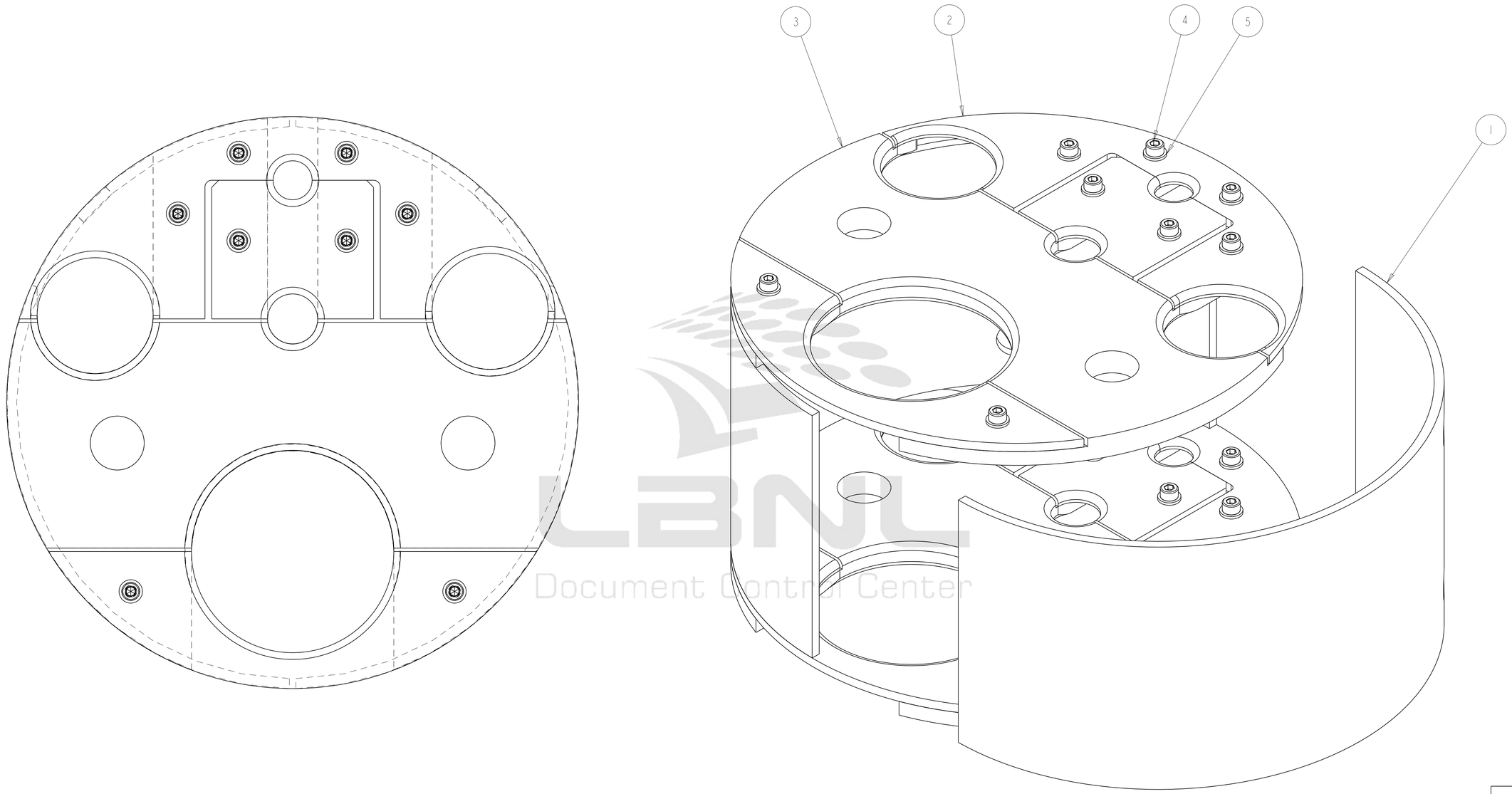

SCALE FULL

LBNL
Document Control Center

THIRD ANGLE PROJECTION

REV	DWG	CHK	ZONE	DATE	CHANGES
A	RLM	SPV		11-18-02	INITIAL RELEASE

UNLESS OTHERWISE SPECIFIED

TOLERANCES		
	X.X ± 0.1	FRAC. ± 1/64
	X.XX ± 0.03	Angles ± 1.00°
	X.XXX ± 0.010	FINISH 125 √ (µin)

DO NOT SCALE PRINT

THREADS ARE CLASS 2
CHAMFER ENDS OF ALL SCREW TREADS 30°
CUT ROUND, 1.5 THREAD RELIEF ON MACHINED THREADS
BREAK EDGES .016 MAX. ON MACHINED WORK
REMOVE BURRS, WELD SPLATTER & LOOSE SCALE
IN ACCORDANCE WITH ASME Y14.5M & B46.1

SHOP ORDERS

ACCT NO.	NO. REQD	SER NO.	-
DEL TO		DATE ISSD	-
SURFACE TREATMT	-	DATE REQD	-
IDENT METHOD	TAG		
PROJECT NUMBER	N/A		
PROJECT NAME	N/A		
DWG BY	R. LA MANTIA	DATE	14-Nov-02
CHK BY	S VIROSTEK	DATE	18-Nov-02
APR BY	D OSHATZ	DATE	18-Nov-02

ERNEST ORLANDO LAWRENCE
BERKELEY NATIONAL LABORATORY
UNIVERSITY OF CALIFORNIA - BERKELEY

LHC IR FEEDBOX
CRYOGENICS
SUPPORT, QQSA, DFBXB

MICROFILMED:	DWG. TYPE	SHOWN ON	SCALE: 1.000	DO NOT SCALE PRINTS
	ASSEM	251871	SHEET 1 OF 1	
PATENT CLEAR:	DESIGN ACCT. NO.	CATEGORY CODE	DWG. NO.	SIZE / REV.
	Z5LCE3	LH2003	2510954	A

Officially Released to the LBNL Document Control Center
Released: December 19th, 2002 DCC Auth Key: TGYOQ30ZGS
Downloaded by: Daniel Pulsifer at April 09, 2007 10:57:29