NOTES: (UNLESS OTHERWISE SPECIFIED)

1. ITEMS 1 THRU 7 ARE ASSEMBLED WITH FASTENERS IN THE NEXT ASSEMBLY.
2. DIMENSIONS AND TOLERANCING PER ANSI Y14.5M-1982. UNITS ARE IN INCHES [mm] UNLESS OTHERWISE SPECIFIED.

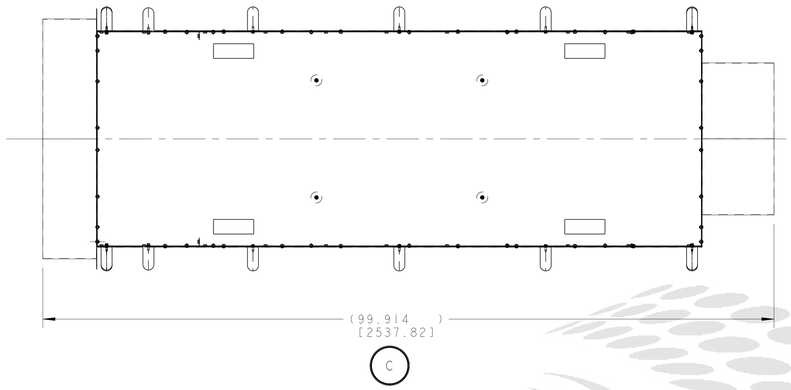

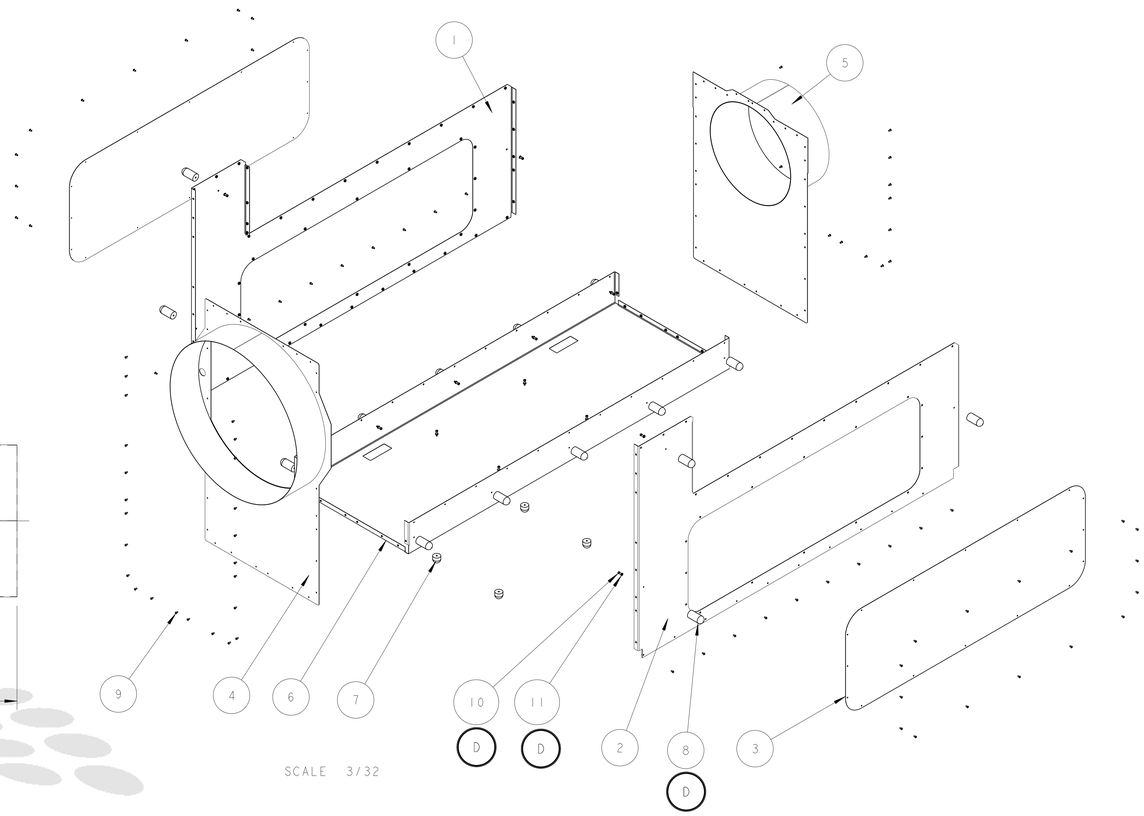

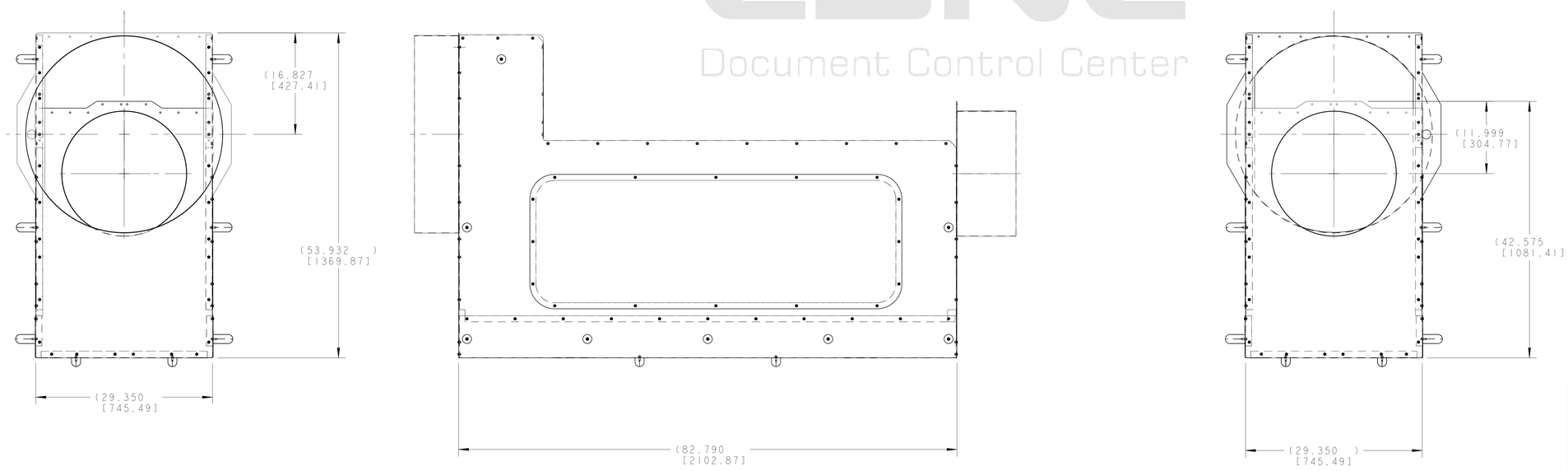

ITEM	PART NO	REQD	DESCRIPTION	MATERIAL
11	-	20	WASHER, M6, McMSTR#93475A250 OR EQ.	SS 18-8
10	-	20	SCH, M6X1, 14LG, McMSTR#91292A070 OR EQ.	SS 18-8
9	-	95	BTN HD CAP SCR M5x.8, 10mm LG McMSTR# 92095A208 OR EQ.	SS 18-8
8	25M996	16	SPACER, THERMAL SIDE SHIELD	NEMA G10
7	251080	4	SPACER, THERMAL SHIELD, BOTTOM	NEMA G10
6	251646	1	THERMAL SHIELD, BOTTOM COVER	OFHC 1011
5	251072	1	THERMAL SHIELD, SIDE LBX	OFHC 1011
4	251073	1	THERMAL SHIELD, SIDE LQX	OFHC 1011
3	251070	2	THERMAL SHIELD, ACCESS COVER	COPPER, OFHC, C101
2	251067	1	THERMAL SHIELD, SIDE COVER, HALF 2	OFHC 1011
1	251066	1	THERMAL SHIELD, SIDE COVER, HALF 1	OFHC 1011

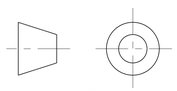

THIRD ANGLE PROJECTION

REV	DWG	CHK	ZONE	DATE	CHANGES
D	RLM	JPZ		5/5/04	ADD SPACER 25M996, ADD FASTENERS AND WASHERS, CLARIFY TITLE
C	RLM	JPZ		10/16/03	99.914 WAS 97.370
B	ARH	DPO		03/05/03	MINOR COSMETIC DRAWING CHANGES
A	ARH	DPO		11-09-02	INITIAL RELEASE

UNLESS OTHERWISE SPECIFIED

TOLERANCES		
	X.X ± 0.1	FRAC. ± 1/64
	X.XX ± 0.03	Angles ± 1.00°
	X.XXX ± 0.010	FINISH 125/

DO NOT SCALE PRINT

THREADS ARE CLASS 2
CHAMFER ENDS OF ALL SCREW TREADS 30°
CUT ROUND, 1.5 THREAD RELIEF ON MACHINED THREADS
BREAK EDGES .016 MAX. ON MACHINED WORK
REMOVE BURRS, WELD SPLATTER & LOOSE SCALE
IN ACCORDANCE WITH ASME Y14.5M & B46.1

SHOP ORDERS

ACCT NO.	NO. REQD	SER NO.	-
		DATE ISSD	-
DEL TO		DATE REQD	-
SURFACE TREATMT	-		
IDENT METHOD	TAG		
PROJECT NUMBER	N/A		
PROJECT NAME	N/A		
DWG BY	R. LA MANTIA	DATE	14-Aug-02
CHK BY	Jon Zbasnik	DATE	11-Sep-02
APR BY	Jon Zbasnik	DATE	11-Sep-02

ERNEST ORLANDO LAWRENCE BERKELEY NATIONAL LABORATORY
UNIVERSITY OF CALIFORNIA - BERKELEY

LHC IR FEEDBOX
CRYOGENICS
THERMAL SHIELD ASSEMBLY

D

MICROFILMED:	DWG. TYPE	SHOWN ON	SCALE: 1/8	DO NOT SCALE PRINTS
	ASSEM	24C3526	SHEET 1 OF 1	
PATENT CLEAR:	DESIGN ACCT. NO.	CATEGORY CODE	DWG. NO.	SIZE / REV.
	Z5LCE2	LH2003	2510796	D

DWG. NO. 2510796 SIZE D REV. 1 SH. 1

LBNL Document Control Center

Officially Released to the LBNL Document Control Center
Released: May 5th, 2004 DCC Auth Key: 3TUO9E24WC
Downloaded by: Daniel Pulsifer at April 09, 2007 10:57:29