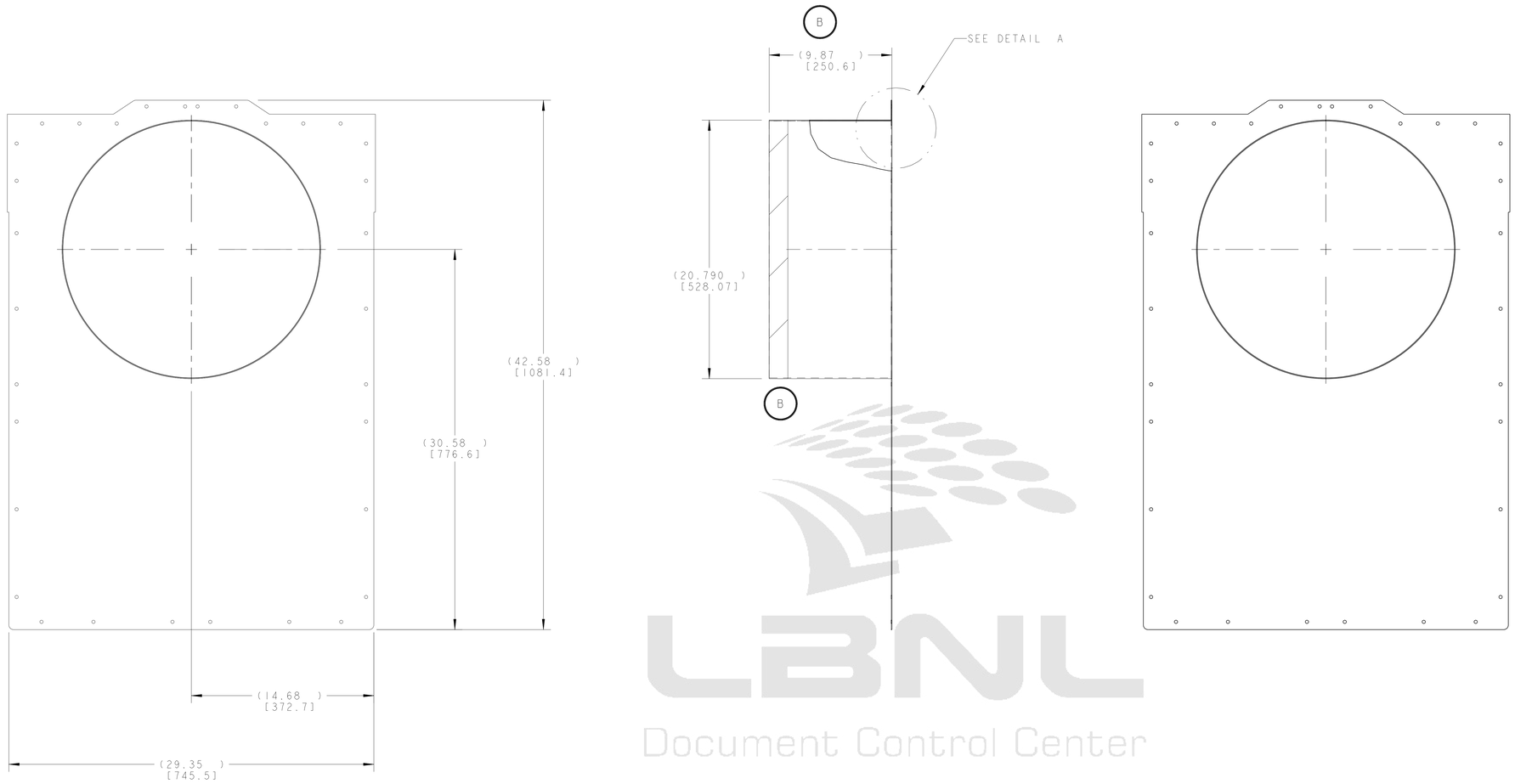

LBNL
Document Control Center

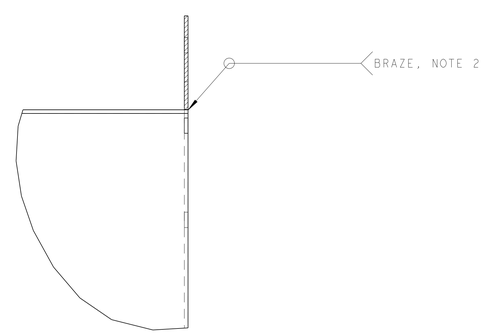

DETAIL A
SCALE 1/1

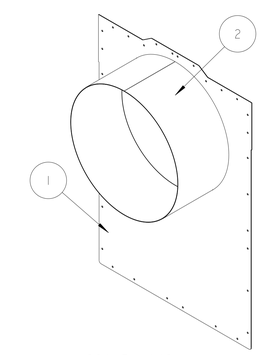

SCALE 1/8

NOTES: (UNLESS OTHERWISE SPECIFIED)

1. THIS IS A CRYOGENIC VACUUM COMPONENT.
2. WELDING PROCEDURE: PER VENDOR SPECIFICATION WITH LBNL APPROVAL.
3. CLEANING PROCEDURE : PER VENDOR SPECIFICATION WITH LBNL APPROVAL.
4. PACKAGING AND STORAGE PROCEDURE OF THE COMPONENTS: PER VENDOR SPECIFICATION WITH LBNL APPROVAL.
5. DIMENSIONS AND TOLERANCING PER ANSI Y14.5M-1982. UNITS ARE IN INCHES [mm] UNLESS OTHERWISE SPECIFIED.
6. USE OF SULFUR OR SILICONE BEARING OILS, LUBRICANTS, OR COOLANTS ARE STRICTLY PROHIBITED.
7. USE OF RESIN OR RUBBER BONDED ABRASIVES UNDER POWER IS STRICTLY PROHIBITED. USE VITREOUS BONDED ABRASIVES ONLY.
8. TIN NOTED AREAS WITH 60/40 Sn/Pb SOLDER, USE RESIN FLUX.

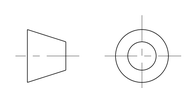

THIRD ANGLE PROJECTION

REV	DWG	CHK	ZONE	DATE	CHANGES
B	JDR	DPO		02-24-03	INCREASED LENGTH FROM 7.32 ADDED PRETINNING
A	ARH	DPO		09-12-02	INITIAL RELEASE

ITEM	PART NO	REQD	DESCRIPTION	MATERIAL
2	-	1	SHEET, .125 THICK	COPPER, OFHC, C101
1	-	1	SHEET, .125 THICK	COPPER, OFHC, C101

UNLESS OTHERWISE SPECIFIED
TOLERANCES: X.X ± 0.1 FRAC. ± 1/64; X.XX ± 0.03 Angles ± 1.00°; X.XXX ± 0.010 FINISH 125/
DO NOT SCALE PRINT
THREADS ARE CLASS 2
CHAMFER ENDS OF ALL SCREW THREADS 30°
CUT ROUND, 1.5 THREAD RELIEF ON MACHINED THREADS
BREAK EDGES .016 MAX. ON MACHINED WORK
REMOVE BURRS, WELD SPLATTER & LOOSE SCALE
IN ACCORDANCE WITH ASME Y14.5M & B46.1

SHOP ORDERS
ACCT NO. / NO. REQD / SER NO. / DATE ISSD / DEL TO / DATE REQD
SURFACE TREATMT: -
IDENT METHOD: TAG
PROJECT NUMBER: N/A
PROJECT NAME: N/A
DWG BY: KNOLLS DATE: 24-Oct-01
CHK BY: Jon Zbasnik DATE: 24-OCT-01
APR BY: Jon Zbasnik DATE: 24-OCT-01

ERNEST ORLANDO LAWRENCE
BERKELEY NATIONAL LABORATORY
UNIVERSITY OF CALIFORNIA - BERKELEY

LHC IR FEEDBOX
CRYOGENICS
THERMAL SHIELD, SIDE LBX

MICROFILMED: | DWG. TYPE: ASSEM | SHOWN ON: VARIOUS | SCALE: 1/4 | DO NOT SCALE PRINTS
PATENT CLEAR: | DESIGN ACCT. NO.: Z5LCE2 | CATEGORY CODE: LH2003 | DWG. NO.: 2510726 | SIZE: B | REV.: B
SHEET 1 OF 3

DWG. NO. 2510726 SIZE B REV. 1

Officially Released to the LBNL Document Control Center
Released: March 5th, 2003 DCC Auth Key: 3IB15FH1NZ
Downloaded by: Daniel Pulsifer at April 09, 2007 10:57:28

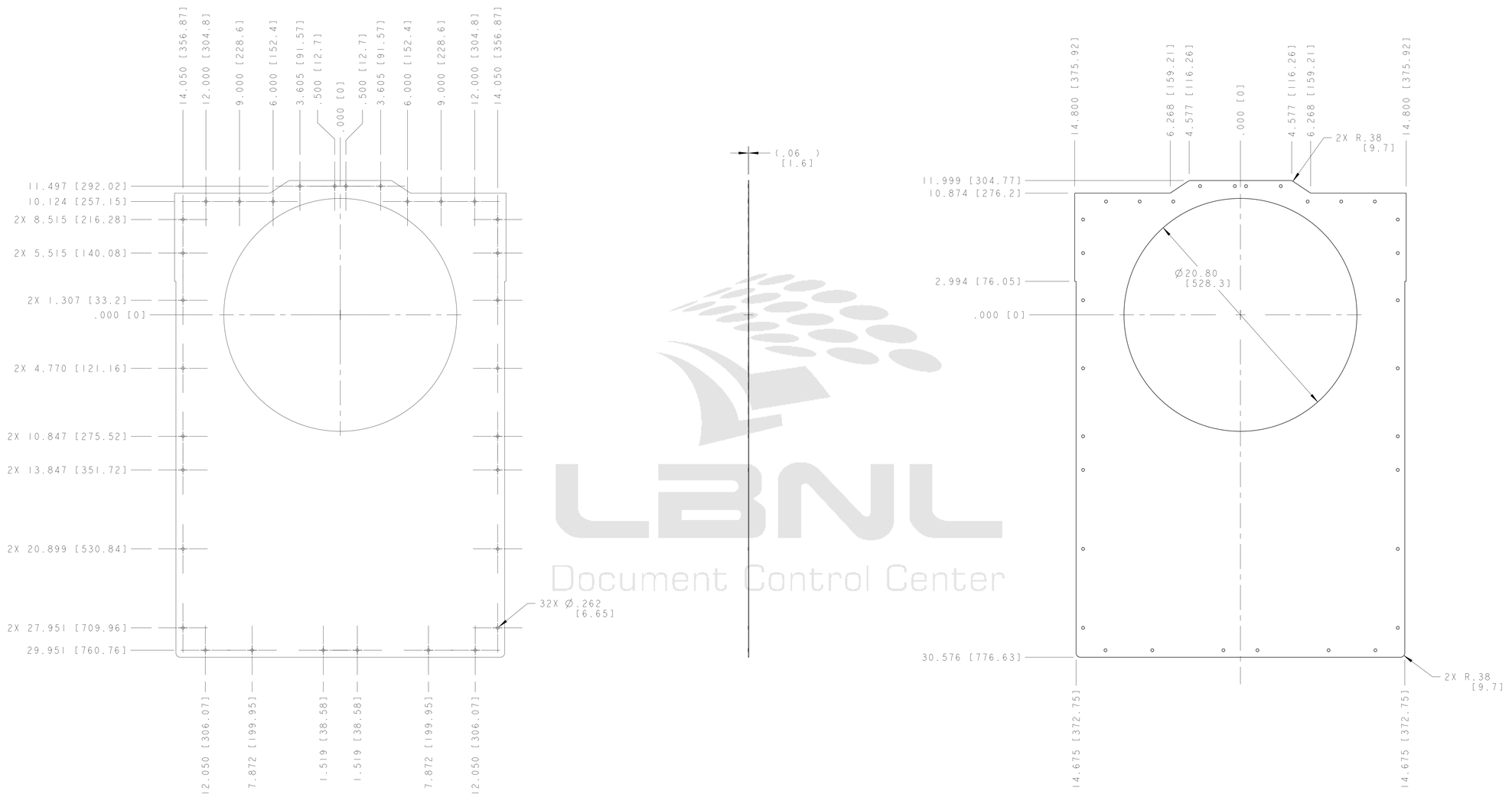

LBNL
Document Control Center

ERNEST ORLANDO LAWRENCE
BERKELEY NATIONAL LABORATORY
UNIVERSITY OF CALIFORNIA - BERKELEY

LHC IR FEEDBOX
CRYOGENICS
THERMAL SHIELD, SIDE LBX

MICROFILMED:	DWG. TYPE	SHOWN ON	SCALE: 1/4	DO NOT SCALE PRINTS
	ASSEM	VARIOUS	SHEET 2 OF 3	
PATENT CLEAR:	DESIGN ACCT. NO.	CATEGORY CODE	DWG. NO.	REV.
	Z5LCE2	LH2003	2510726	B

DWG. NO. 2510726 SIZE B SHT. 2

Officially Released to the LBNL Document Control Center
Released: March 5th, 2003 DCC Auth Key: 3IB15FH1NZ
Downloaded by: Daniel Pulsifer at April 09, 2007 10:57:28

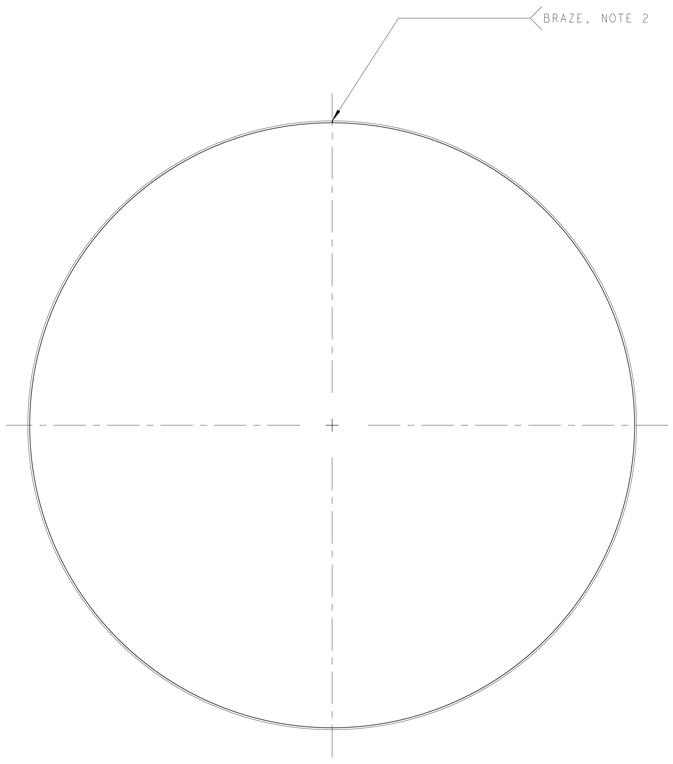

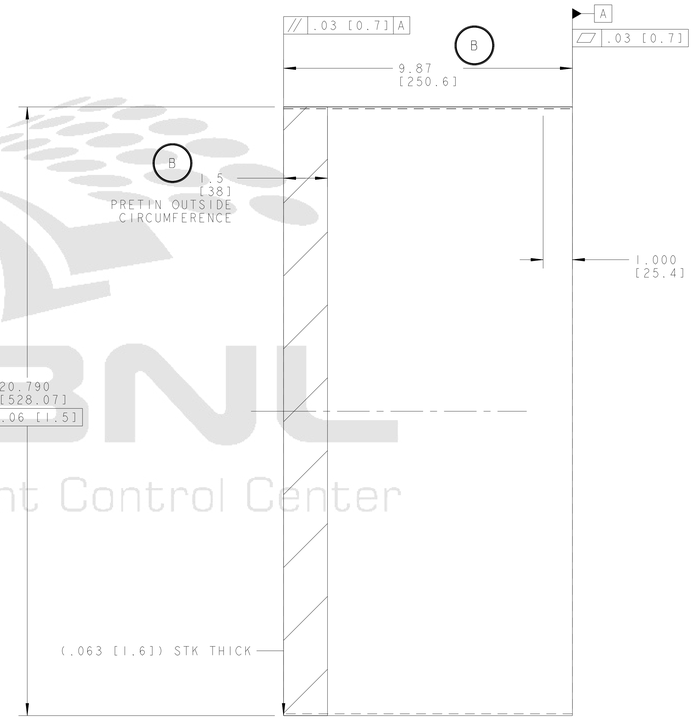

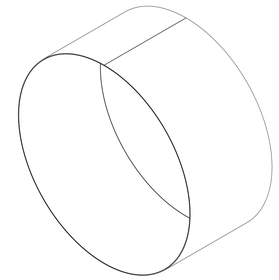

SCALE ~13/64

LBNL
Document Control Center

ERNEST ORLANDO LAWRENCE
BERKELEY NATIONAL LABORATORY
UNIVERSITY OF CALIFORNIA - BERKELEY

LHC IR FEEDBOX
CRYOGENICS
THERMAL SHIELD, SIDE LBX

MICROFILMED:	DWG. TYPE	SHOWN ON	SCALE: 1/4	DO NOT SCALE PRINTS
	ASSEM	VARIOUS	SHEET 3 OF 3	
PATENT CLEAR:	DESIGN ACCT. NO.	CATEGORY CODE	DWG. NO.	SIZE / REV.
	Z5LCE2	LH2003	2510726	B

DWG. NO. 2510726 SIZE/REV. B SH. 3

Officially Released to the LBNL Document Control Center
Released: March 5th, 2003 DCC Auth Key: 3IB15FH1NZ
Downloaded by: Daniel Pulsifer at April 09, 2007 10:57:28