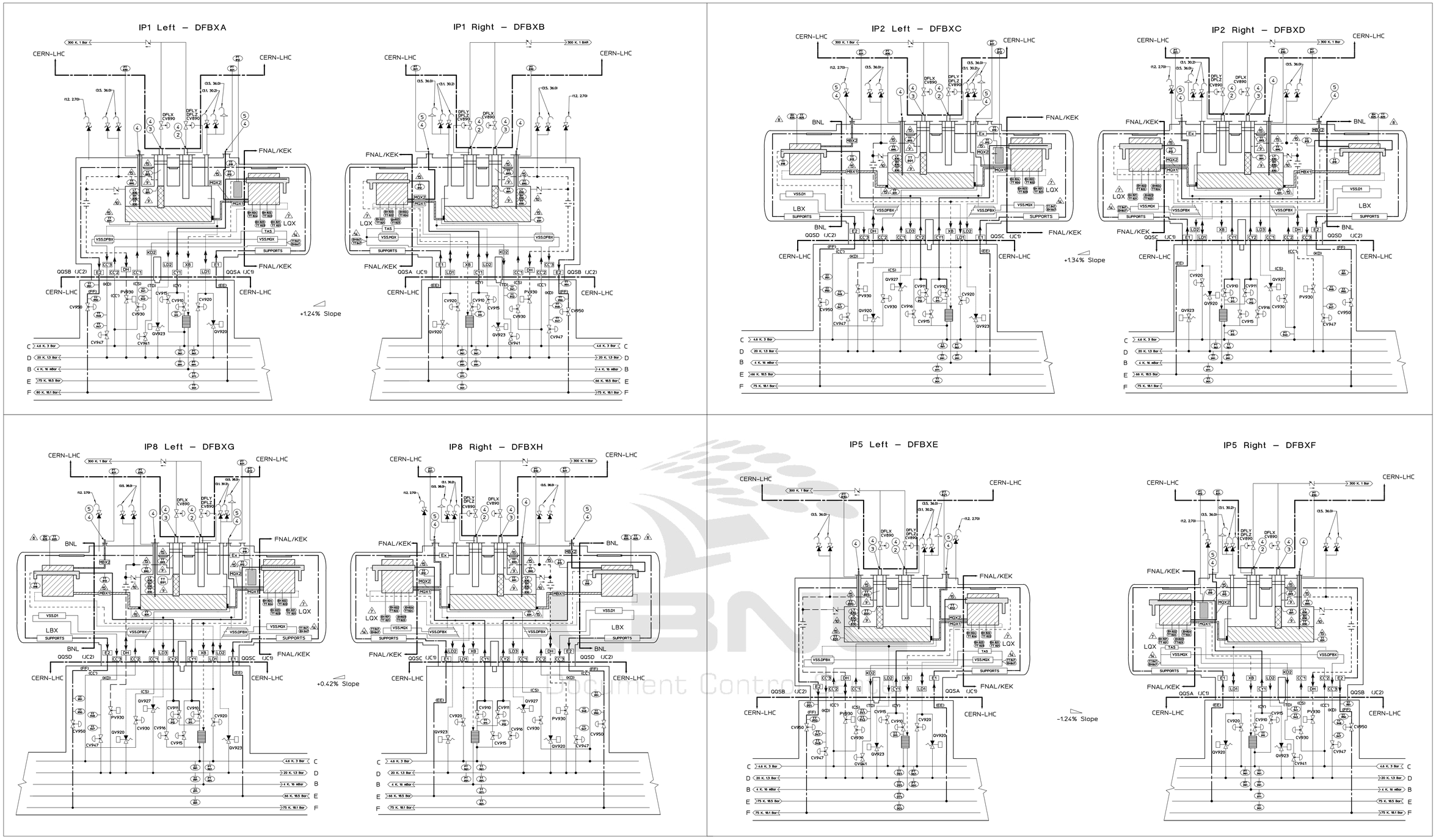

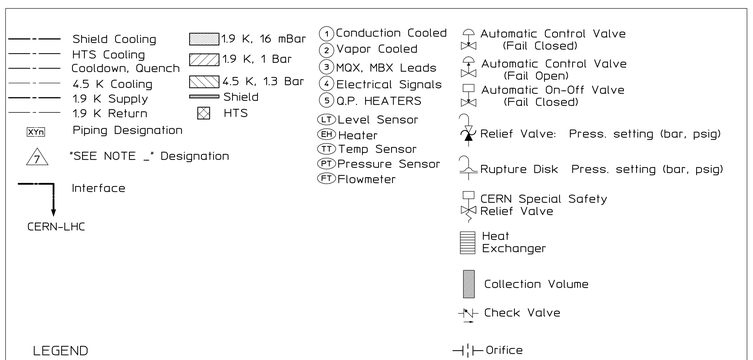

NOTES:

1. HEADER TEMPERATURES AND PRESSURES ARE APPROXIMATE NOMINAL CONDITIONS.
2. INTERFACE BOUNDARIES ARE INDICATED.
3. ALL SENSORS IN LQX NOT SHOWN.
4. QRL SENSORS INCLUDED FOR REFERENCE.
5. PIPING DESIGNATIONS PER LHC-Q-ES-0001.00 rev 1.0 SHOWN IN ( ) AS REQUIRED.
6. SAFETY RELIEF DEVICES PER LBNL ENG. NOTE M8054.
7. INSTRUMENTATION IS 2X REDUNDANT AT EACH LOCATION. WIRES CONNECT TO LQX FEEDTHROUGH VIA MQX2 TUBE.
8. RESERVED.
9. INSTRUMENTATION WIRES IN HTS LEAD FEEDTHROUGH. ONLY TT891 IS 2X REDUNDANT. 4 HTS LEADS PER BOX.
10. INSTRUMENTATION WIRES IN LHE DIAGNOSTIC FEEDTHROUGH 2X REDUNDANT.
11. UNLESS OTHERWISE NOTED, INSTRUMENTATION WIRES IN VACUUM SPACE.
12. VSS INTERCONNECTION HARDWARE PROVIDED BY CERN.
13. RELIEF DEVICE PRESSURE SETTINGS IN BAR (ABSOLUTE)
14. WIRES EXIT AT Q1.
15. SENSOR NOT REDUNDANT.

25H4126

FORMERLY 24C3706M

FOR CERN USE

PART NO.	DESCRIPTION

UNLESS OTHERWISE SPECIFIED — TOLERANCES

SHOP ORDERS: ACCT. NO. / SERIAL NO. / DATE ISSD / DATE REQD / NO REQD / DELIVER TO

THREADS ARE CLASS 2. CHAMFER ENDS OF ALL SCREW THREADS 30°. CUT 1.5 PITCH THRD RELIEF WITH ROUND NOSE TOOL ON MACHINE CUT THREADS. BREAK EDGES .016 MAX. ON MACHINED WORK. REMOVE BURRS WELD SPLATTER & LOOSE SCALE. REFERENCES: ANSI Y14.5 & B46.1.

SURFACE TREATMENT / IDENT METH.

DWG. BY Y. KAJIYAMA DATE 23-OCT-02
CHK. BY JON ZBASNIK DATE 23-OCT-02

REV	DWG	CHK	ZONE	DATE	CHANGES

LAWRENCE BERKELEY LABORATORY
UNIVERSITY OF CALIFORNIA-BERKELEY

LARGE HADRON COLLIDER, IR FEEDBOX
CRYOGENICS
LHC-DFBX FLOW SCHEMATICS

PATENT CLEAR | DWG. TYPE SCHEMATIC | SHOWN ON | SCALE N/A | DO NOT SCALE PRINTS.
MICROFILMED | DESIGN ACCT. NO. Z5LCE2 | CATEGORY CODE LH2003 | DWG. NO. 25H4126 | SIZE | REV.

AUTO GENERATED PDF – Dec 14 2005 15:00:13 PST

Officially Released to the LBNL Document Control Center
Released: October 25th, 2002 DCC Auth Key: M8URRLT1WP
Downloaded by: Daniel Pulsifer at April 10, 2007 08:07:07