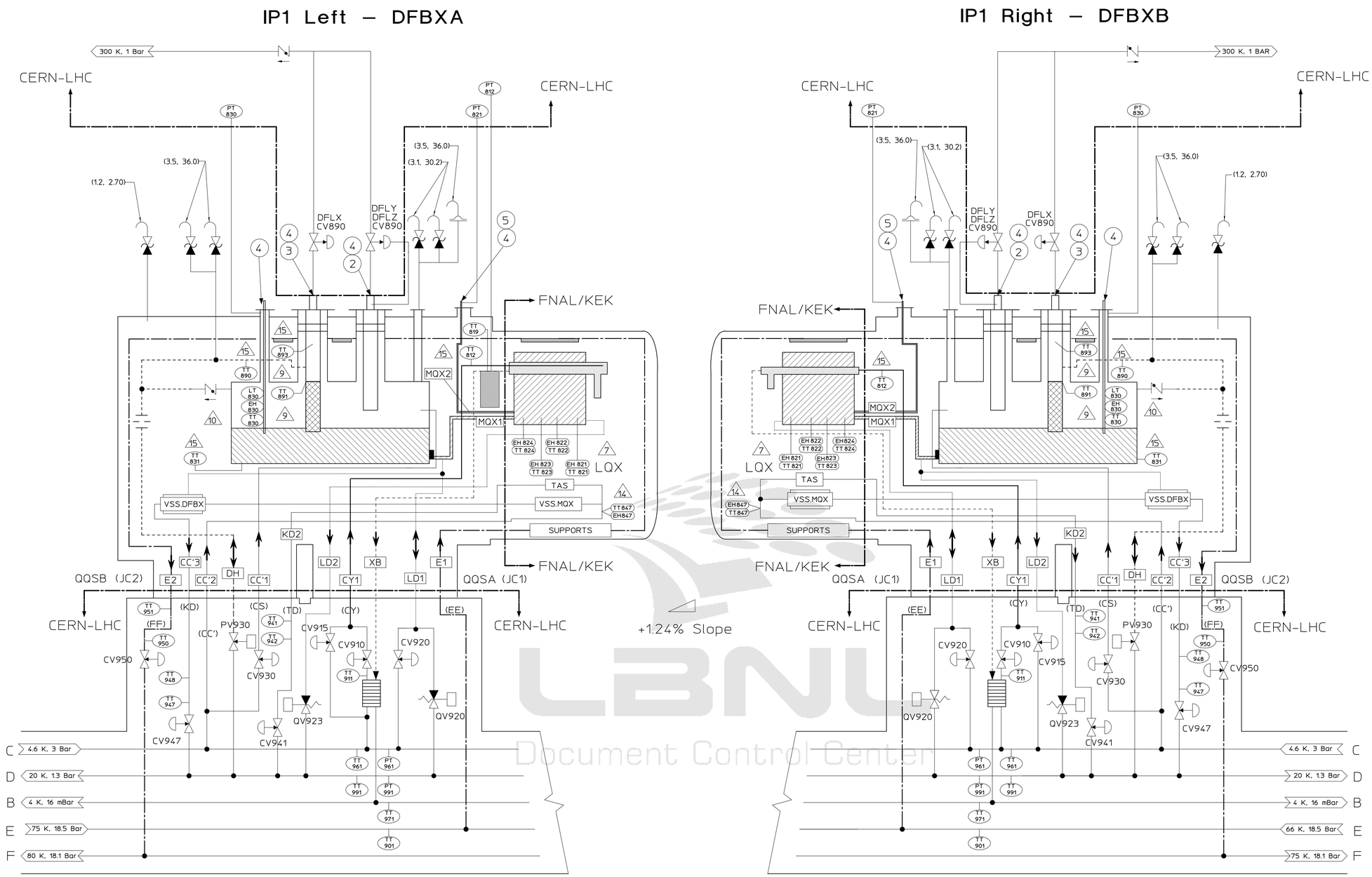

LBNL Document Control Center

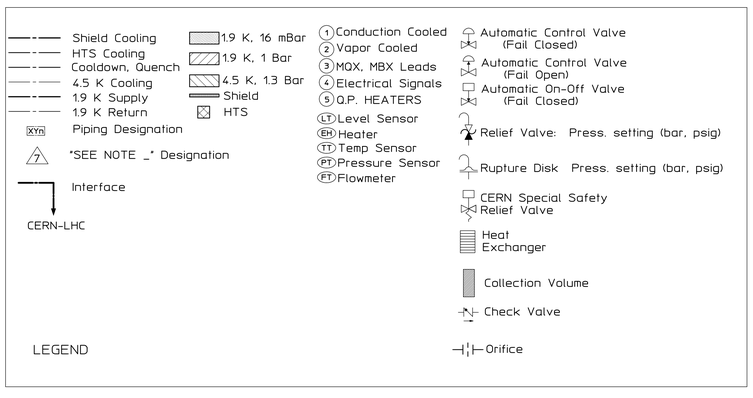

NOTES:

1. HEADER TEMPERATURES AND PRESSURES ARE APPROXIMATE NOMINAL CONDITIONS.
2. INTERFACE BOUNDARIES ARE INDICATED.
3. ALL SENSORS IN LQX NOT SHOWN.
4. QRL SENSORS INCLUDED FOR REFERENCE.
5. PIPING DESIGNATIONS PER LHC-Q-ES-0001.00 rev 1.0 SHOWN IN ( ) AS REQUIRED.
6. SAFETY RELIEF DEVICES PER LBNL ENG. NOTE M8054.
7. INSTRUMENTATION IS 2X REDUNDANT AT EACH LOCATION. WIRES CONNECT TO LQX FEEDTHROUGH VIA MQX2 TUBE.
8. RESERVED.
9. INSTRUMENTATION WIRES IN HTS LEAD FEEDTHROUGH. ONLY TT891 IS 2X REDUNDANT. 4 HTS LEADS PER BOX.
10. INSTRUMENTATION WIRES IN LHE DIAGNOSTIC FEEDTHROUGH 2X REDUNDANT.
11. UNLESS OTHERWISE NOTED, INSTRUMENTATION WIRES IN VACUUM SPACE.
12. VSS INTERCONNECTION HARDWARE PROVIDED BY CERN.
13. RELIEF DEVICE PRESSURE SETTINGS IN BAR (ABSOLUTE)
14. WIRES EXIT AT Q1.
15. SENSOR NOT REDUNDANT.

25H4086

FORMERLY 24C3706-1

FOR CERN USE

PART NO.	DESCRIPTION

REV	DWG	CHK	ZONE	DATE	CHANGES

UNLESS OTHERWISE SPECIFIED
TOLERANCES
THREADS ARE CLASS 2
CHAMFER ENDS OF ALL SCREW THREADS 30°. CUT 1.5 PITCH THRD RELIEF WITH ROUND NOSE TOOL ON MACHINE CUT THREADS.
BREAK EDGES .016 MAX. ON MACHINED WORK. REMOVE BURRS WELD SPLATTER & LOOSE SCALE
REFERENCES: ANSI Y14.5 & B46.1.

SHOP ORDERS
ACCT. NO. | SERIAL NO.
DATE ISSD | DATE REQD. | NO. REQD.
DELIVER TO
SURFACE TREATMENT
IDENT. METH.
DWG. BY Y. KAJIYAMA DATE 21-OCT-02
CHK. BY JON ZBASNIK DATE 21-OCT-02

LAWRENCE BERKELEY LABORATORY
UNIVERSITY OF CALIFORNIA-BERKELEY
LARGE HADRON COLLIDER, IR FEEDBOX
CRYOGENICS
DFBX IP1 FLOW SCHEMATICS

PATENT CLEAR	DWG. TYPE	SHOWN ON	SCALE	DO NOT SCALE PRINTS
	SCHEMATIC		N/A	

MICROFILMED	DESIGN ACCT. NO.	CATEGORY CODE	DWG. NO.	SIZE	REV.
	Z5LCE6	LH2003	25H4086		

AUTO GENERATED PDF – Dec 14 2005 14:59:04 PST

Officially Released to the LBNL Document Control Center
Released: October 21st, 2002 DCC Auth Key: R3XJJXPLKX

Downloaded by: Daniel Pulsifer at April 10, 2007 08:07:07