DWG. NO.	SIZE	REV.	SH.
25H4064	B	1	

ITEM	PART NO	REQD	DESCRIPTION	MATERIAL
5	25H404	2	THREADED ROD	SS
4	25H403	1	END PLATE	SS 304L
3	25H401	1	WELD CLAMP	SS 304L
2	-	4	SPHER WSHR ASSY MORTON:NUT #SCN-2SS, WASHER #SP-2SS	SS
1	-	4	1/2"-13UNC JAM NUT	SS

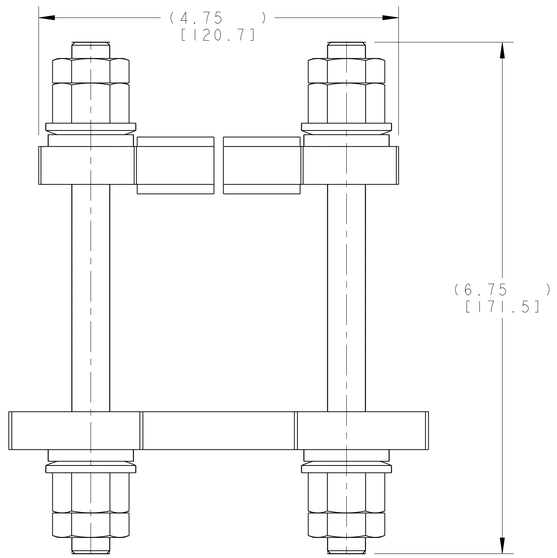

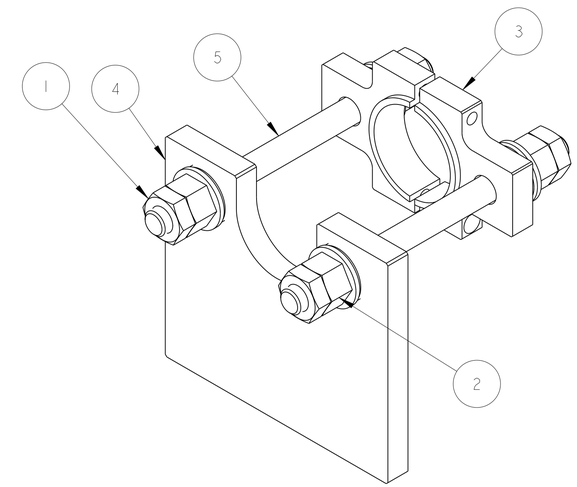

SCALE 3/4

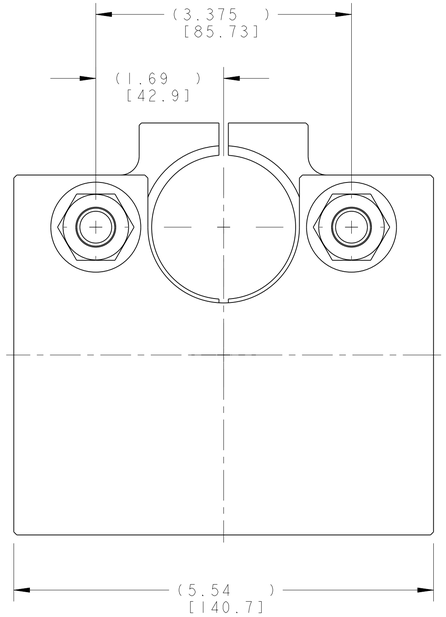

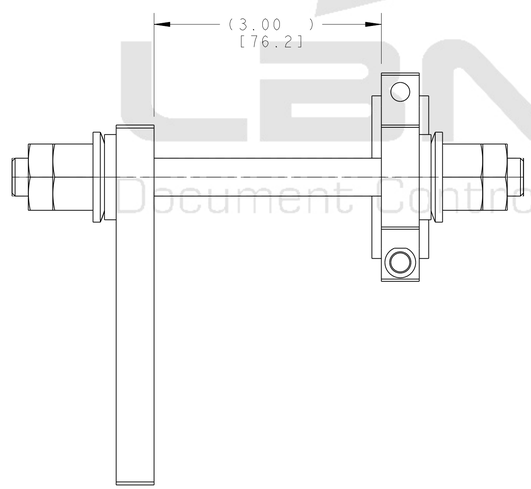

NOTES: (UNLESS OTHERWISE SPECIFIED)

1. THIS IS A CRYOGENIC VACUUM COMPONENT.
2. WELDING PROCEDURE: PER VENDOR SPECIFICATION WITH LBNL APPROVAL.
3. CLEANING PROCEDURE : PER VENDOR SPECIFICATION WITH LBNL APPROVAL.
4. PACKAGING AND STORAGE PROCEDURE OF THE COMPONENTS: PER VENDOR SPECIFICATION WITH LBNL APPROVAL.
5. DIMENSIONS AND TOLERANCING PER ANSI Y14.5M-1982. UNITS ARE IN INCHES [mm] UNLESS OTHERWISE SPECIFIED.
6. USE OF SULFUR OR SILICONE BEARING OILS, LUBRICANTS, OR COOLANTS ARE STRICTLY PROHIBITED.
7. USE OF RESIN OR RUBBER BONDED ABRASIVES UNDER POWER IS STRICTLY PROHIBITED. USE VITREOUS BONDED ABRASIVES ONLY.
8. VENDOR SUGGESTED CHANGES TO WELD PREPS; SUBJECT TO LBNL APPROVAL.
9. VENDOR SUGGESTED CHANGES TO TOLERANCES TO FACILITATE FABRICATION OR ASSEMBLY; SUBECT TO LBNL APPROVAL.

LBNL Document Control Center

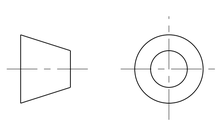

THIRD ANGLE PROJECTION

REV	DWG	CHK	ZONE	DATE	CHANGES
B	ARH	SPV		01/08/03	REVISED BOM ITEM NUMBERS, ITEM 2 WAS ITEM 5
A	ARH	DPO		9-16-02	INITIAL RELEASE

UNLESS OTHERWISE SPECIFIED
TOLERANCES: X.X ± 0.1 FRAC. ± 1/64; X.XX ± 0.03 Angles ± 1.00°; X.XXX ± 0.010 FINISH 125 √(μin)
DO NOT SCALE PRINT
THREADS ARE CLASS 2
CHAMFER ENDS OF ALL SCREW TREADS 30°
CUT ROUND, 1.5 THREAD RELIEF ON MACHINED THREADS
BREAK EDGES .016 MAX. ON MACHINED WORK
REMOVE BURRS, WELD SPLATTER & LOOSE SCALE
IN ACCORDANCE WITH ASME Y14.5M & B46.1

SHOP ORDERS
ACCT NO. / NO. REQD / SER NO. -
DEL TO / DATE ISSD -
SURFACE TREATMT - / DATE REQD -
IDENT METHOD TAG
PROJECT NUMBER N/A
PROJECT NAME N/A
DWG BY KNOLLS DATE 23-Jul-02
CHK BY J.ZBASNIK/D.OSHATZ DATE 4-02-02
APR BY J.ZBASNIK/D.OSHATZ DATE 4-02-02

ERNEST ORLANDO LAWRENCE BERKELEY NATIONAL LABORATORY
UNIVERSITY OF CALIFORNIA - BERKELEY

LHC IR FEEDBOX
CRYOGENICS
THRUST SUPPORT, BUS DUCT

MICROFILMED:	DWG. TYPE	SHOWN ON	SCALE: 1/1	DO NOT SCALE PRINTS
	ASSEM	-	SHEET 1 OF 1	
PATENT CLEAR:	DESIGN ACCT. NO.	CATEGORY CODE	DWG. NO.	SIZE / REV.
	Z5LCE3	LH2003	25H4064	B

Officially Released to the LBNL Document Control Center
Released: March 5th, 2003 DCC Auth Key: PPELJKE61H
Downloaded by: Daniel Pulsifer at April 09, 2007 10:57:28