NOTE:
1. DERIVED FROM SPECIFICATION LHC-DFBX-ES-100
2. DERIVED FROM SPECIFICATION LHC-DFBX-ES-200
3. DERIVED FROM SPECIFICATION LHC-DFBX-ES-210
4. DERIVED FROM SPECIFICATION LHC-DFBX-ES-240
5. DERIVED FROM SPECIFICATION LHC-DFBX-ES-260
6. DERIVED FROM SPECIFICATION LHC-DFBX-ES-250
7. DERIVED FROM SPECIFICATION LHC-DFBX-ES-230
8. FILL MOUNTING HOLES WITH EPOXY
9. HTS CURRENT LEAD IN SPECIFICATION M923B

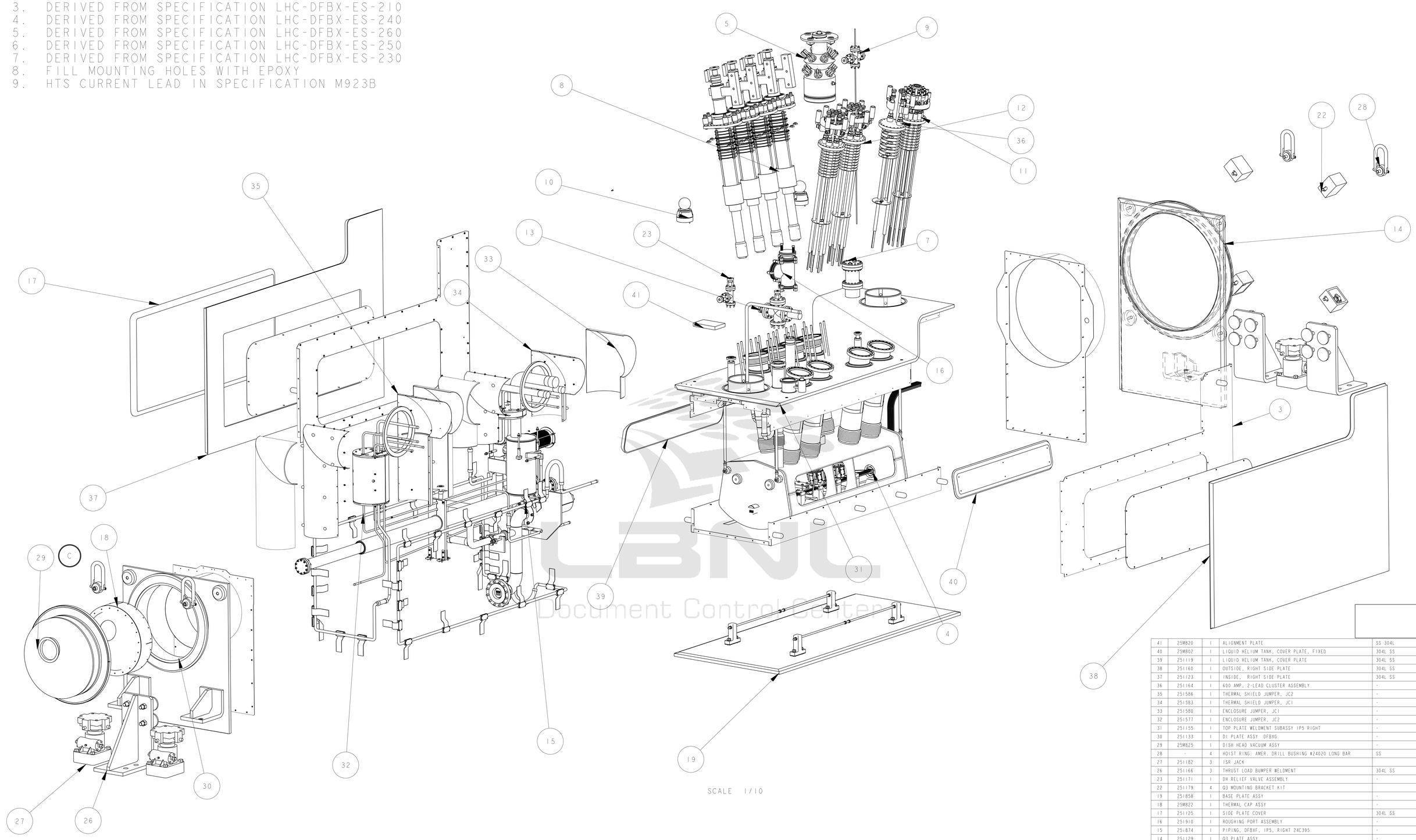


SCALE 1/10

LBNL Document Control Center

| ITEM | PART NO | REQD | DESCRIPTION | MATERIAL |
|---|---|---|---|---|
| 41 | 25M820 | 1 | ALIGNMENT PLATE | SS 304L |
| 40 | 25M802 | 1 | LIQUID HELIUM TANK, COVER PLATE, FIXED | 304L SS |
| 39 | 251119 | 1 | LIQUID HELIUM TANK, COVER PLATE | 304L SS |
| 38 | 251160 | 1 | OUTSIDE, RIGHT SIDE PLATE | 304L SS |
| 37 | 251123 | 1 | INSIDE, RIGHT SIDE PLATE | 304L SS |
| 36 | 251164 | 1 | 600 AMP, 2-LEAD CLUSTER ASSEMBLY | - |
| 35 | 251586 | 1 | THERMAL SHIELD JUMPER, JC2 | - |
| 34 | 251583 | 1 | THERMAL SHIELD JUMPER, JC1 | - |
| 33 | 251580 | 1 | ENCLOSURE JUMPER, JC1 | - |
| 32 | 251577 | 1 | ENCLOSURE JUMPER, JC2 | - |
| 31 | 251155 | 1 | TOP PLATE WELDMENT SUBASSY IP5 RIGHT | - |
| 30 | 251133 | 1 | DI PLATE ASSY DFBXG | - |
| 29 | 25M825 | 1 | DISH HEAD VACUUM ASSY | - |
| 28 | - | 4 | HOIST RING: AMER. DRILL BUSHING #24020 LONG BAR | SS |
| 27 | 251182 | 3 | ISR JACK | |
| 26 | 251166 | 3 | THRUST LOAD BUMPER WELDMENT | 304L SS |
| 23 | 251171 | 1 | DH RELIEF VALVE ASSEMBLY | - |
| 22 | 251179 | 4 | Q3 MOUNTING BRACKET KIT | |
| 19 | 251858 | 1 | BASE PLATE ASSY | - |
| 18 | 25M822 | 1 | THERMAL CAP ASSY | - |
| 17 | 251125 | 1 | SIDE PLATE COVER | 304L SS |
| 16 | 251910 | 1 | ROUGHING PORT ASSEMBLY | - |
| 15 | 251874 | 1 | PIPING, DFBXF, IP5, RIGHT 24C395 | - |
| 14 | 251129 | 1 | Q3 PLATE ASSY | - |
| 13 | 251339 | 1 | HELIUM PORT RELIEF VALVE ASSEMBLY | - |
| 12 | 24C353 | 2 | 600 AMP,6 LEAD VAPOR COOLED ASSY | - |
| 11 | 24C322 | 1 | 120 AMP VC LEAD MOUNTING ASSY | - |
| 10 | 251868 | 2 | TOOLING BALL, LHCGIMSA00092 | - |
| 9 | 251162 | 1 | LHE DIAGNOSTIC ASSY | - |
| 8 | 251156 | 6 | PIRELLI HTS LEAD KIT | - |
| 7 | 251851 | 1 | HELIUM GUARD ASSEMBLY | - |
| 5 | 251831 | 1 | LQX DIAGONSTIC ASSEMBLY | - |
| 4 | 251864 | 1 | BUS DUCT ASSEMBLY | - |
| 3 | 251079 | 1 | THERMAL SHIELD ASSY, DFBXG | - |

11. SOLDER JOINT USING SN60PB40 SOLDER; ROSIN FLUX, USE SPLICE PLATE IF REQUIRED
12. CLOSEOUT WELD PROCEDURE TO BE APPROVED BY LBNL
    DISTORTION CONTROL IS ESSENTIAL, ROOT PASS GTAW, COVER PASSES GMAW, SMAW, FCMAW.
13. WELD PROCEDURE TO BE APPROVED BY LBNL, USE GTAW PROCESS
14. BELLOWS TO BE WITHIN 0.03" OF FREE CONFIGURATION AFTER CLOSEOUT WELDING
15. DIMENSIONS FROM DFBX FLANGE FACE ON DI SIDE, ADD -2367.2 MM TO OBTAIN POSITION
    RELEATIVE TO DFBX COORDINATE SYSTEM
16. SHIM TANK SUPPORTS TO LIMIT STATIC DEFLECTION OF THE LOWER TANK SUPPORT RODS
    TO LESS THAN 0.25"
17. DIMENSIONS SHOW IN INSPECTION OVAL ARE REFERENCED IN THE FABRICATION TRAVELER
18. COPPER STRAP ATTACHED TO THE THERMAL ANCHORS DO NOT HAVE TO BE EVENLY SPACED.
19. ALL DIMENSIONS GIVEN AT ROOM TEMPERATURE

THIRD ANGLE PROJECTION

| REV | DWG | CHK | ZONE | DATE | CHANGES |
|---|---|---|---|---|---|
| C | JDR | DPO | | 02/24/03 | CHANGED PIPE END LOCATIONS<br>CHANGED WELD ON SIDE PLATE COVER<br>ADDED DISH HEAD VACUUM ASSY |
| B | JDR | DPO | | 12/12/02 | INITIAL RELEASE |
| A | JDR | DPO | | 10/03/02 | PRELIMINARY RELEASE |

UNLESS OTHERWISE SPECIFIED
TOLERANCES: X.X ± 0.1 FRAC. ± 1/64; X.XX ± 0.03 Angles ± 1.00°; X.XXX ± 0.010 FINISH 125 √(μin)
DO NOT SCALE PRINT
THREADS ARE CLASS 2
CHAMFER ENDS OF ALL SCREW THEADS 30°
CUT ROUND, 1.5 THREAD RELIEF ON MACHINED THREADS
BREAK EDGES .015 MAX. ON MACHINED WORK
REMOVE BURRS, WELD SPLATTER & LOOSE SCALE
IN ACCORDANCE WITH ASME Y14.5M & B46.1

SHOP ORDERS
ACCT NO. / REQD
DEL TO
SURFACE TREATMENT
IDENT METHOD TAG
PROJECT NUMBER
PROJECT NAME N/A
DWG BY M J KNOLLS DATE 02-Nov-01
CHK BY Jon Zbasnik DATE 03-OCT-02
APP BY Jon Zbasnik DATE 03-OCT-02

ERNEST ORLANDO LAWRENCE
BERKELEY NATIONAL LABORATORY
UNIVERSITY OF CALIFORNIA : BERKELEY

LHC IR FEEDBOX
MAJOR ASSEMBLY
DFBXF (IP5,RIGHT) FEED BOX ASSY, IP5 (RIGHT)

MICROFILMED: | DWG. TYPE: ASSEM | SHOWN ON: - | SCALE: 1:3/100 | DO NOT SCALE PRINTS
SHEET 1 OF 11
PATENT CLEAR: | DESIGN ACCT. NO.: Z5LCE2 | CATEGORY CODE: LH2001 | DWG. NO.: 24C3956 | SIZE: C | REV.: C

Officially Released to the LBNL Document Control Center
Released: March 5th, 2003 DCC Auth Key: 3BRK03163C
Downloaded by: Daniel Pulsifer at April 09, 2007 10:57:28

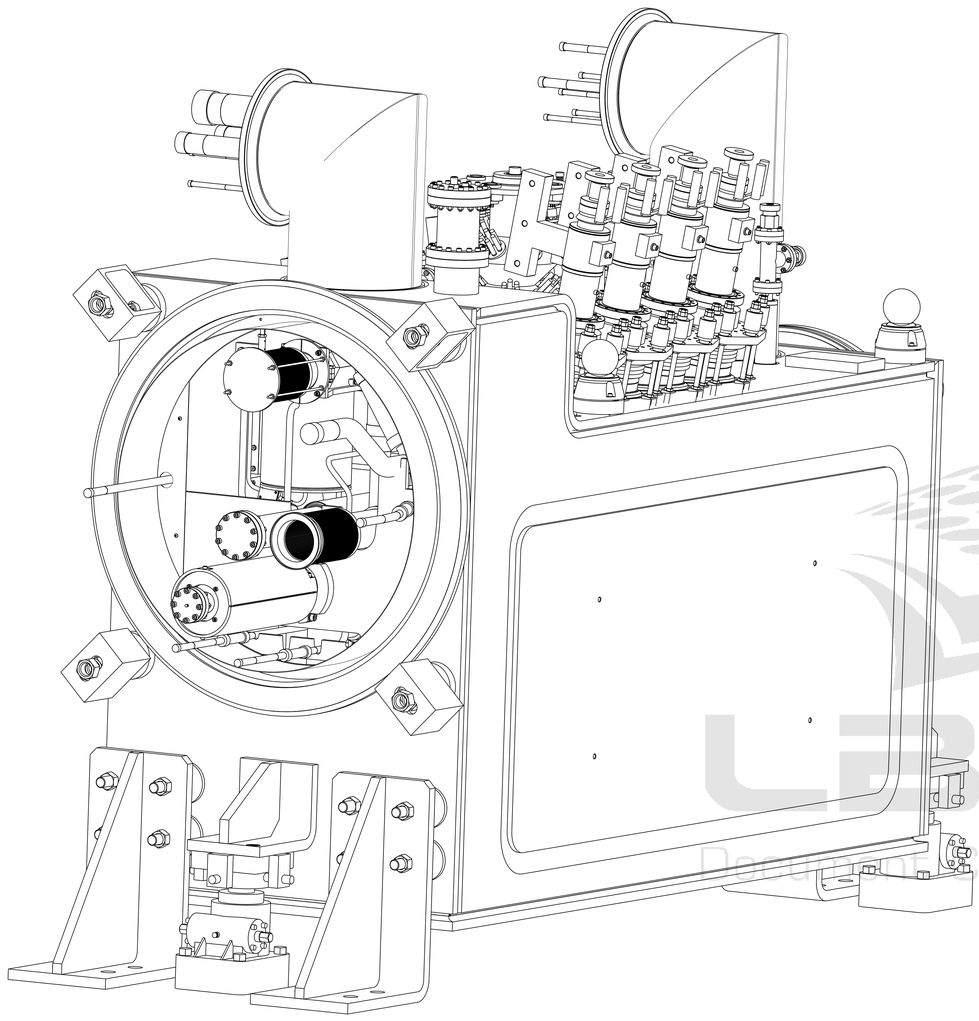

Q3 END

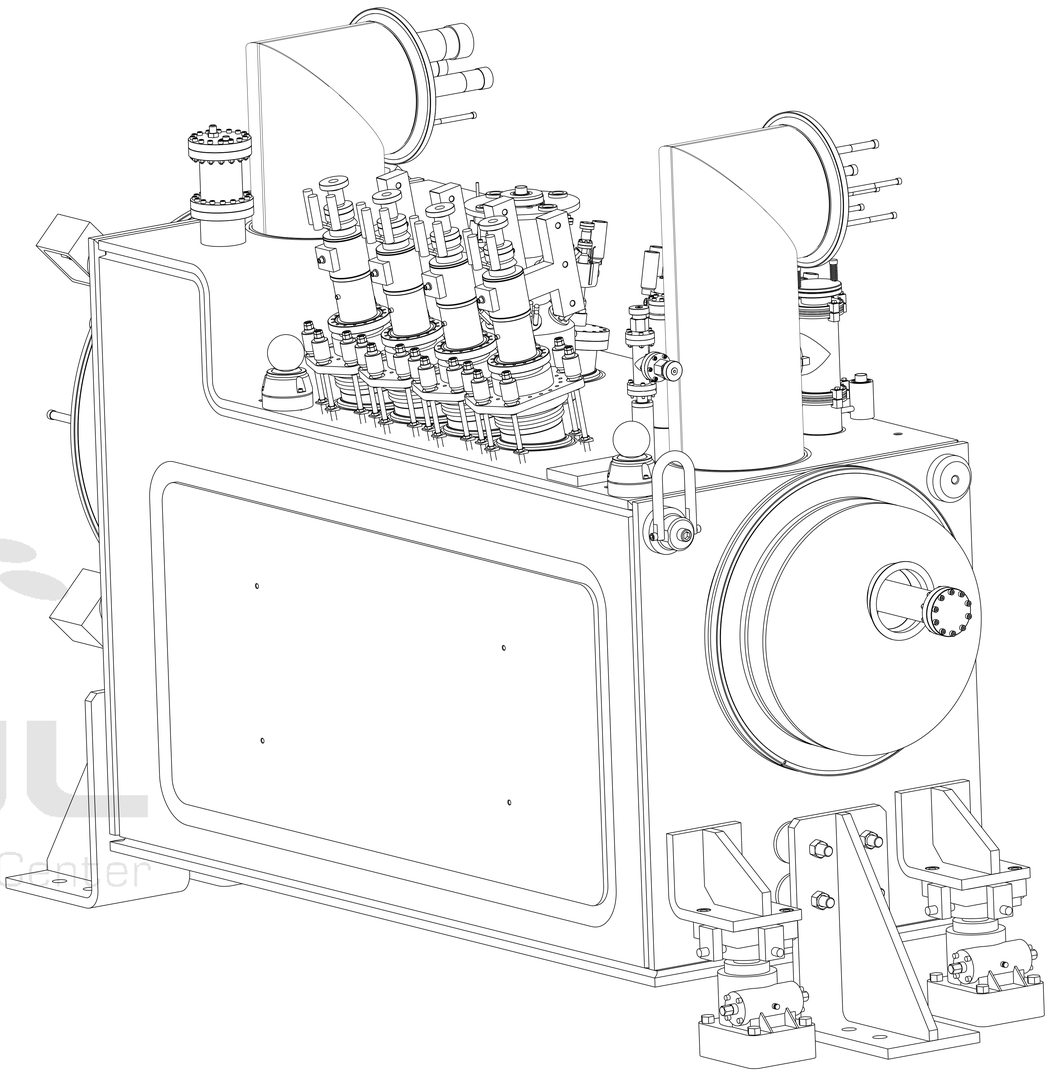

D1 END

DFBXF, IP5 (RIGHT)

THIRD ANGLE PROJECTION

ERNEST ORLANDO LAWRENCE
BERKELEY NATIONAL LABORATORY
UNIVERSITY OF CALIFORNIA · BERKELEY

LHC IR FEEDBOX
MAJOR ASSEMBLY
DFBXF (IP5,RIGHT) FEED BOX ASSY, IP5 (RIGHT)

| MICROFILMED: | DWG. TYPE | SHOWN ON | SCALE: 9/50 | DO NOT SCALE PRINTS |
|---|---|---|---|---|
| | ASSEM | - | SHEET 2 OF 11 | |
| PATENT CLEAR: | DESIGN ACCT. NO. | CATEGORY CODE | DWG. NO. | SIZE / REV. |
| | Z5LCE2 | LH2001 | 24C3956 | C |

DWG. NO. 24C3956 SIZE C REV. 2

Officially Released to the LBNL Document Control Center
Released: March 5th, 2003 DCC Auth Key: 3BRK03163C

Downloaded by: Daniel Pulsifer at April 09, 2007 10:57:28

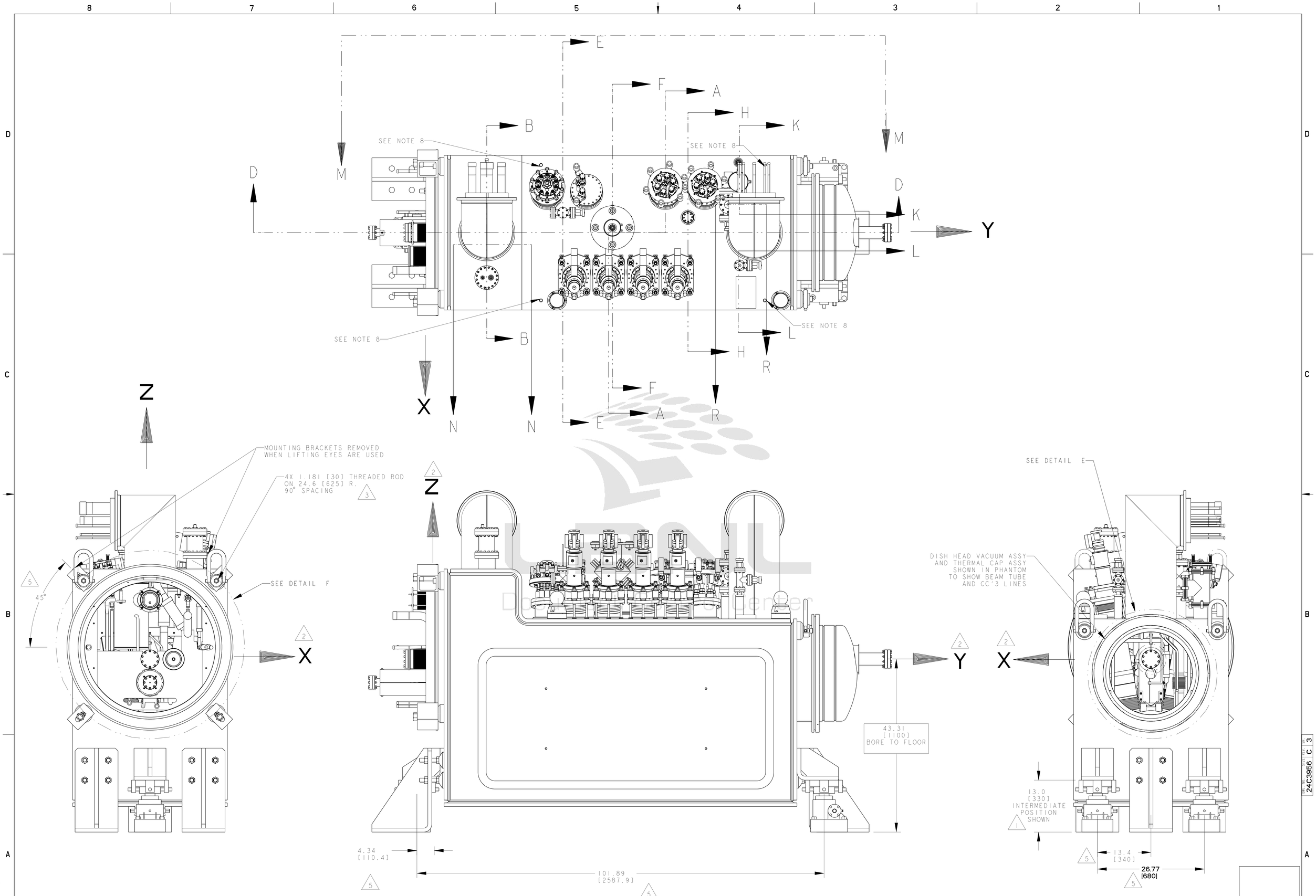


ERNEST ORLANDO LAWRENCE BERKELEY NATIONAL LABORATORY
UNIVERSITY OF CALIFORNIA BERKELEY

LHC IR FEEDBOX
MAJOR ASSEMBLY
DFBXF (IP5,RIGHT) FEED BOX ASSY, IP5 (RIGHT)

| MICROFILMED: | DWG. TYPE: ASSEM | SHOWN ON: - | SCALE: 1:3/100 DO NOT SCALE PRINTS |
|---|---|---|---|
| PATENT CLEAR: | DESIGN ACCT. NO.: Z5LCE2 | CATEGORY CODE: LH2001 | DWG. NO.: 24C3956 SIZE: C REV: |

SHEET 3 OF 11

DWG. NO. 24C3956 SHEET 3 REV. C

Officially Released to the LBNL Document Control Center
Released: March 5th, 2003 DCC Auth Key: 3BRK03163C
Downloaded by: Daniel Pulsifer at April 09, 2007 10:57:28

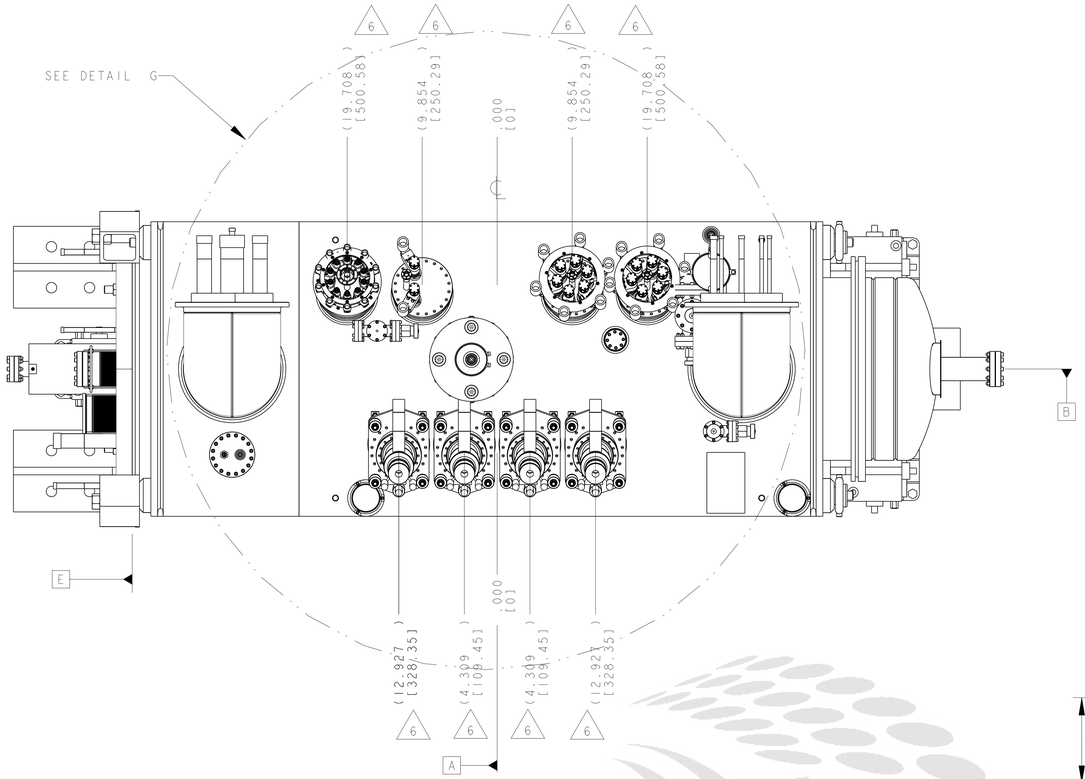


SECTION D - D
SCALE 13/100

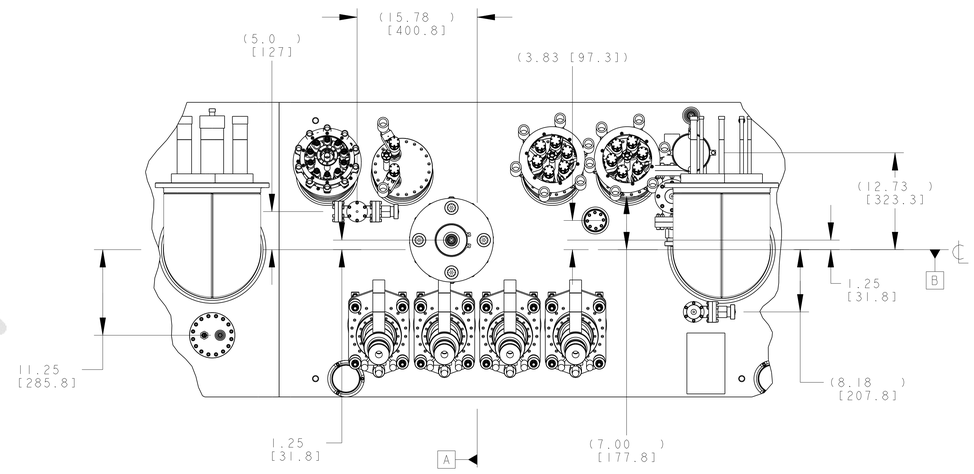


DETAIL G
SCALE 13/100

THIRD ANGLE PROJECTION

ERNEST ORLANDO LAWRENCE BERKELEY NATIONAL LABORATORY
UNIVERSITY OF CALIFORNIA - BERKELEY

LHC IR FEEDBOX
MAJOR ASSEMBLY
DFBXF (IP5,RIGHT) FEED BOX ASSY, IP5 (RIGHT)

| MICROFILMED: | DWG. TYPE | SHOWN ON | SCALE: 13/100 | DO NOT SCALE PRINTS |
|---|---|---|---|---|
| | ASSEM | - | SHEET 4 OF 11 | |
| PATENT CLEAR: | DESIGN ACCT. NO. | CATEGORY CODE | DWG. NO. | SIZE / REV. |
| | Z5LCE2 | LH2001 | 24C3956 | C |

DWG. NO. 24C3956 SIZE/REV. C 4

LBNL Document Control Center

Officially Released to the LBNL Document Control Center
Released: March 5th, 2003 DCC Auth Key: 3BRK03163C

Downloaded by: Daniel Pulsifer at April 09, 2007 10:57:28

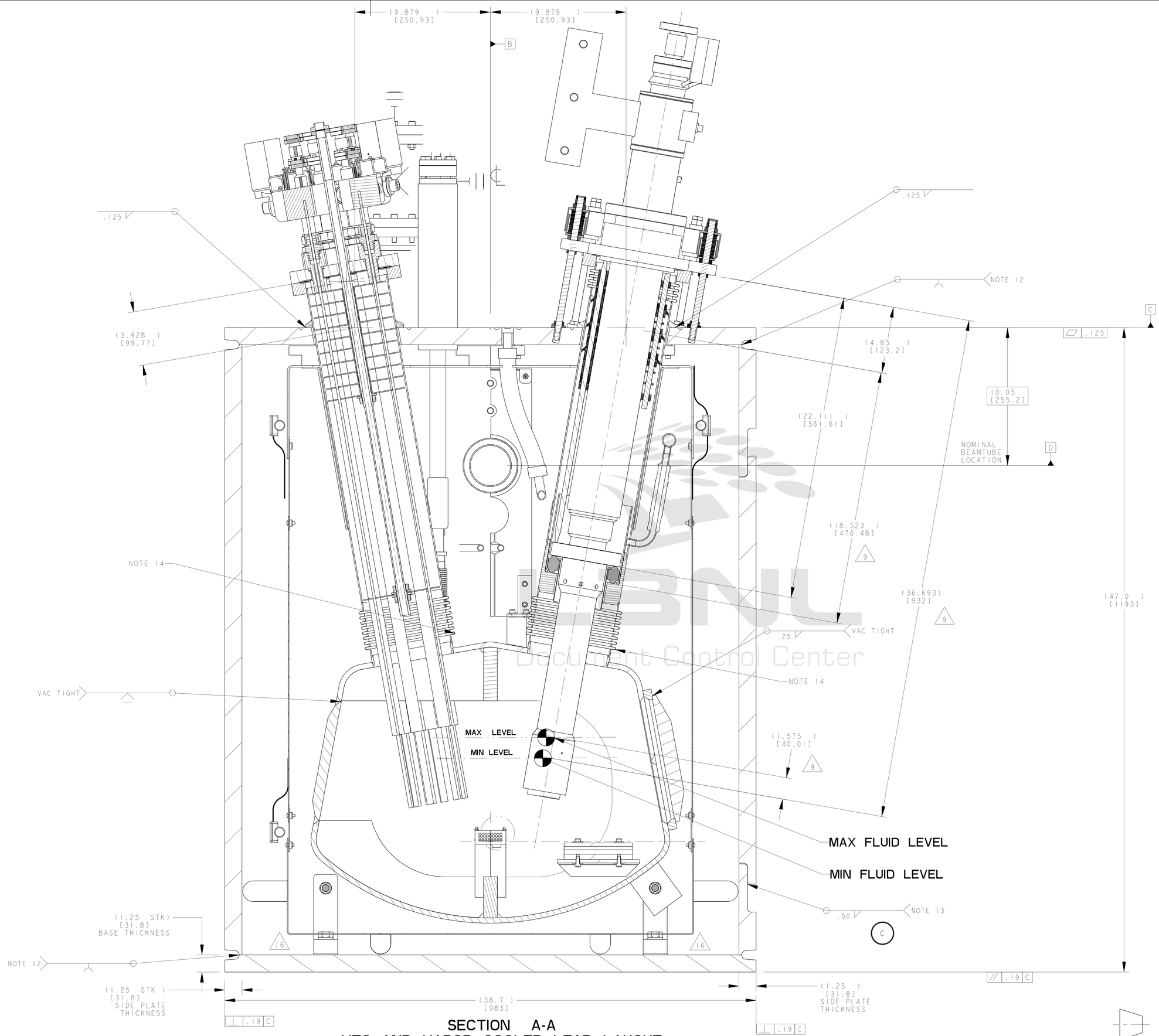


SECTION A-A
HTS AND VAPOR COOLED LEAD LAYOUT
SCALE 2/5

THIRD ANGLE PROJECTION

ERNEST ORLANDO LAWRENCE BERKELEY NATIONAL LABORATORY
UNIVERSITY OF CALIFORNIA · BERKELEY

LHC IR FEEDBOX
MAJOR ASSEMBLY
DFBXF (IP5,RIGHT) FEED BOX ASSY, IP5 (RIGHT)

| MICROFILMED: | DWG. TYPE: ASSEM | SHOWN ON: - | SCALE: 1:3/100 | DO NOT SCALE PRINTS |
|---|---|---|---|---|
| | | | SHEET 5 OF 11 | |
| PATENT CLEAR: | DESIGN ACCT. NO.: Z5LCE2 | CATEGORY CODE: LH2001 | DWG. NO.: 24C3956 | SIZE: REV.: C |

LBNL Document Control Center

Officially Released to the LBNL Document Control Center
Released: March 5th, 2003 DCC Auth Key: 3BRK03163C

Downloaded by: Daniel Pulsifer at April 09, 2007 10:57:28

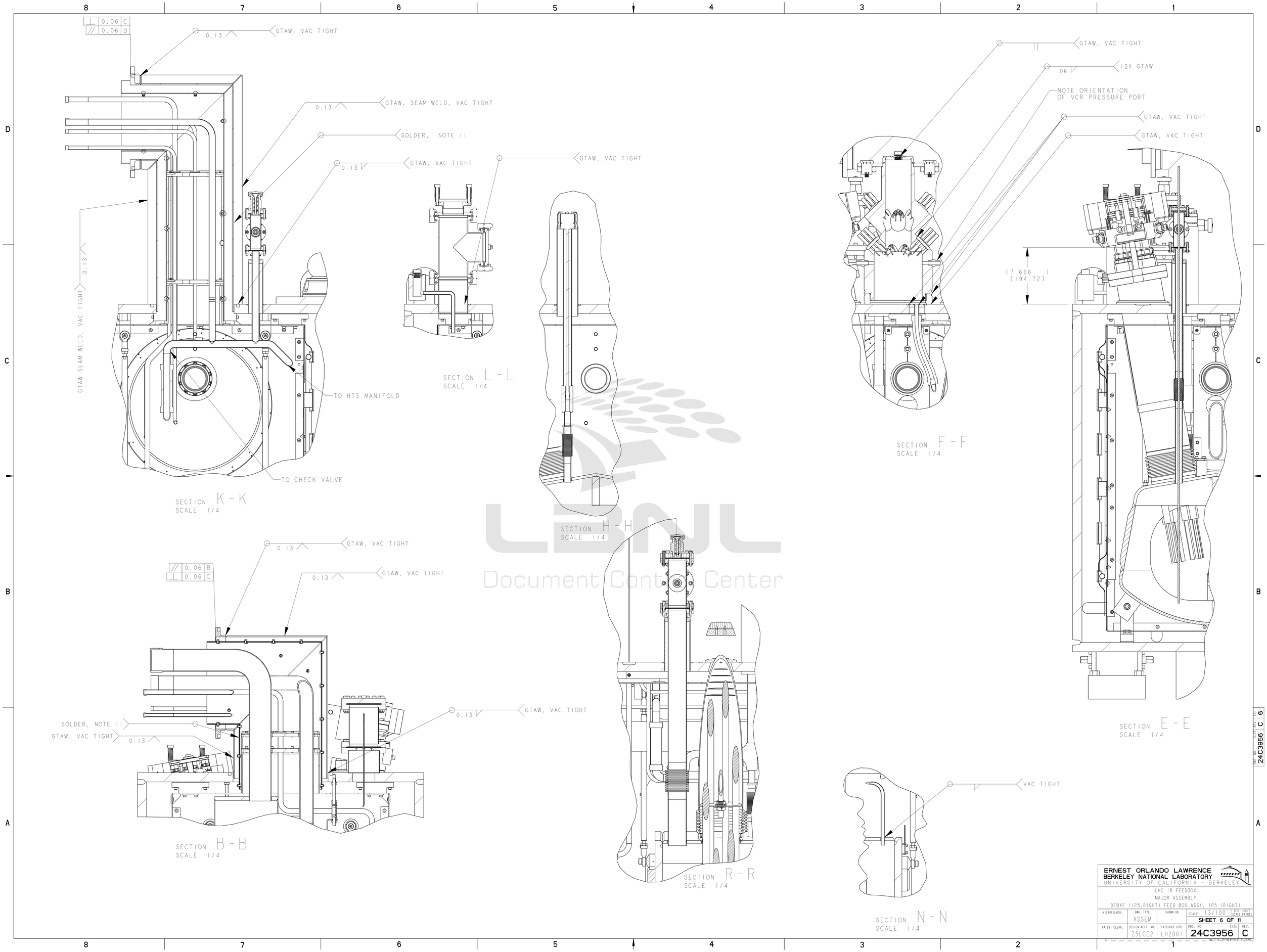


LBNL Document Control Center

Officially Released to the LBNL Document Control Center
Released: March 5th, 2003 DCC Auth Key: 3BRK03163C
Downloaded by: Daniel Pulsifer at April 09, 2007 10:57:28

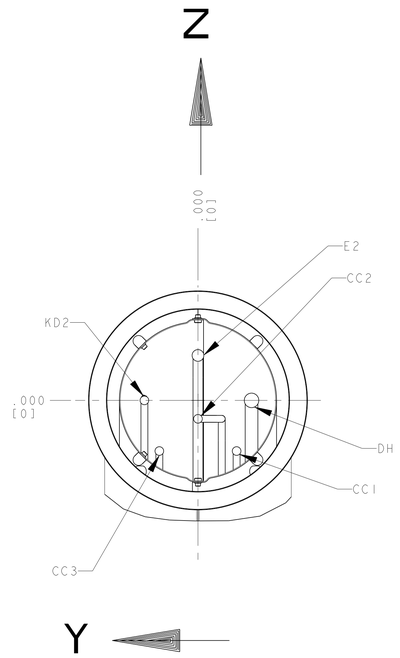


| | | DIM'S MEASURED FROM FLANGE CENTER | | 4 |
|---|---|---|---|---|
| PIPE | X | Y ±0.08 | Z ±0.08 | |
| E2 | -14.45±.08 [367±2] | 0 | 3.07 [78] | |
| DH | -14.45±.08 [367±2] | -3.66 [93] | 0 | |
| KD2 | -14.45±.08 [367±2] | 3.66 [93]] | 0 | |
| CC2 | -14.45±.08 [367±2] | 0 | -1.26 [32] | |
| CC1 | -14.45±.08 [367±2] | -2.64 [67] | -3.46 [88] | |
| CC3 | -14.45±.08 [367±2] | 2.64 [67] | -3.46 [88] | |

DETAIL D
JC2 / QQSD
DIMENSIONAL TOLERANCE ± 0.08
ORIENTATION OPPOSITE OF SPECIFICATION 240
SCALE 1/4

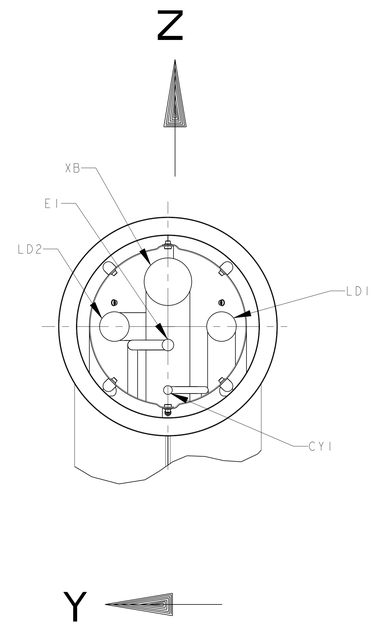


| | | DIM'S MEASURED FROM FLANGE CENTER | | 4 |
|---|---|---|---|---|
| PIPE | X | Y ±0.08 | Z ±0.08 | |
| XB | -14.45±.08 [367±2] | 0 | 3.07 [78] | |
| LD2 | -14.45±.08 [367±2] | 3.66 [93] | 0 | |
| LD1 | -14.45±.08 [367±2] | -3.66 [93] | 0 | |
| E1 | -14.45±.08 [367±2] | 0 | -1.26 [32] | |
| CY1 | -14.45±.08 [367±2] | 0 | -4.33 [110] | |

DETAIL C
JC1 / QQSC
DIMENSIONAL TOLERANCE ± 0.08
ORIENTATION OPPOSITE OF SPECIFICATION 240
SCALE 1/4

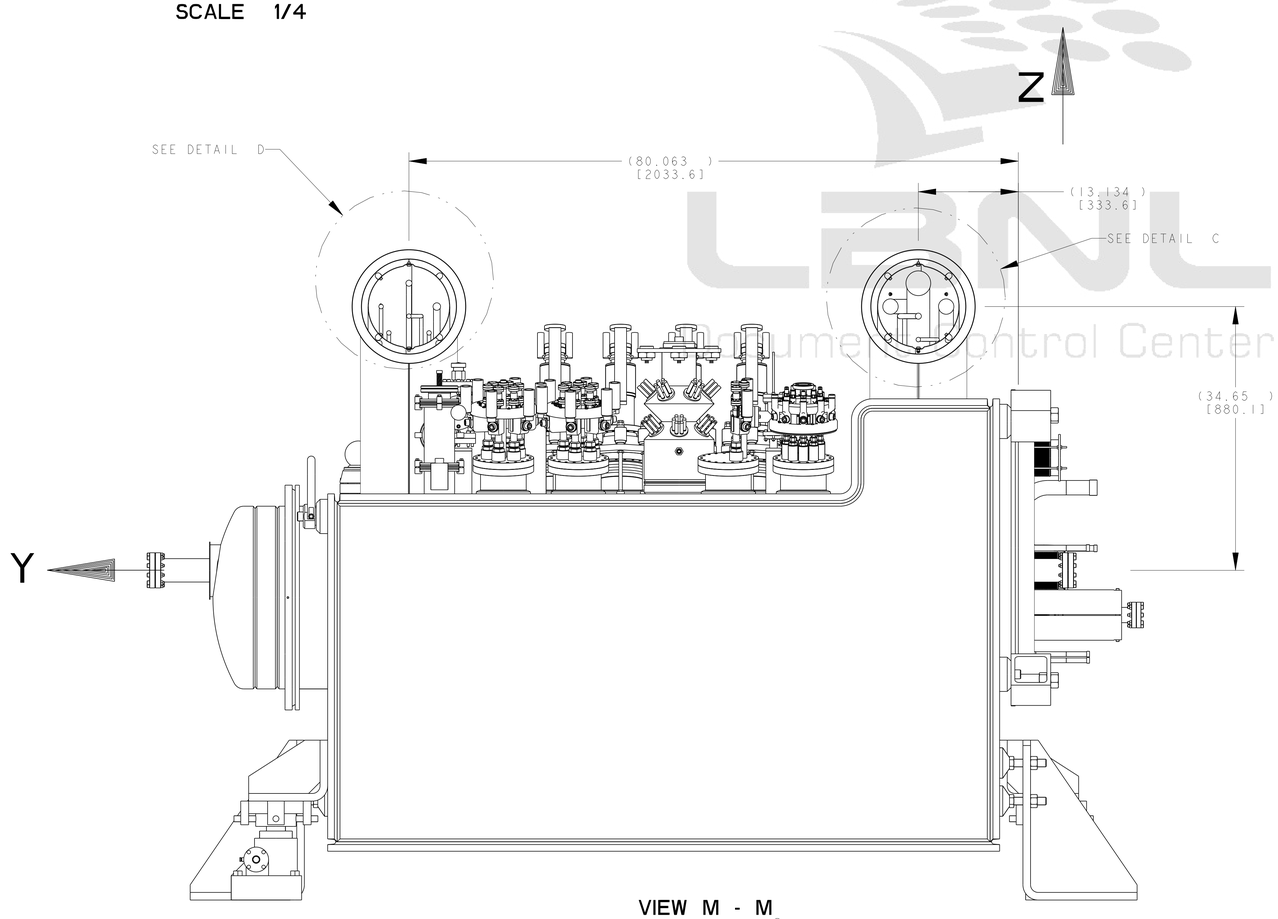


VIEW M - M
ROTATED 180°

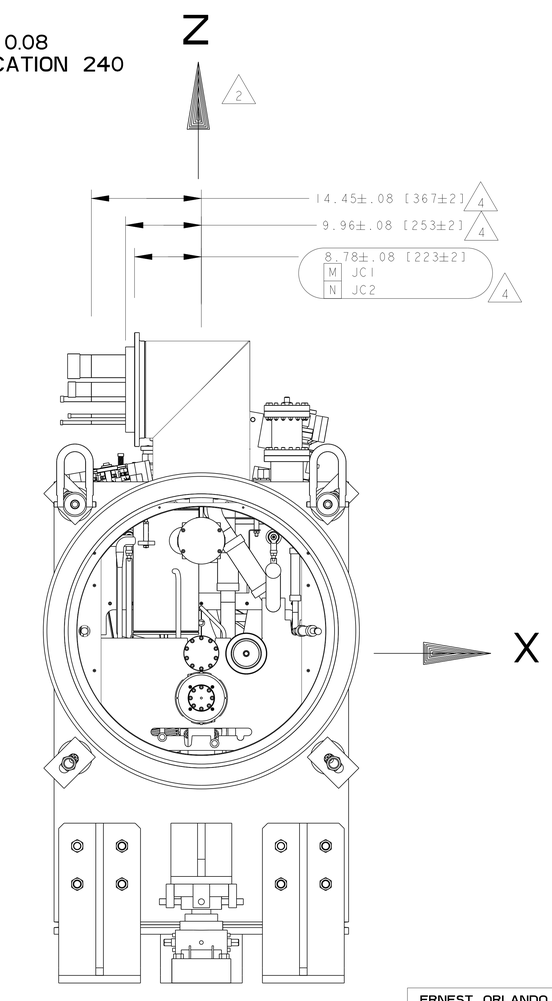


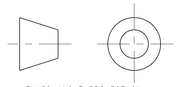


ERNEST ORLANDO LAWRENCE
BERKELEY NATIONAL LABORATORY
UNIVERSITY OF CALIFORNIA · BERKELEY

LHC IR FEEDBOX
MAJOR ASSEMBLY
DFBXF (IP5,RIGHT) FEED BOX ASSY, IP5 (RIGHT)

| MICROFILMED: | DWG. TYPE | SHOWN ON | SCALE: 13/100 | DO NOT SCALE PRINTS |
|---|---|---|---|---|
| | ASSEM | - | SHEET 7 OF 11 | |
| PATENT CLEAR: | DESIGN ACCT. NO. | CATEGORY CODE | DWG. NO. | SIZE / REV. |
| | Z5LCE2 | LH2001 | 24C3956 | C |

DWG. NO. 24C3956 SIZE C SHT 7

Officially Released to the LBNL Document Control Center
Released: March 5th, 2003 DCC Auth Key: 3BRK03163C
Downloaded by: Daniel Pulsifer at April 09, 2007 10:57:28

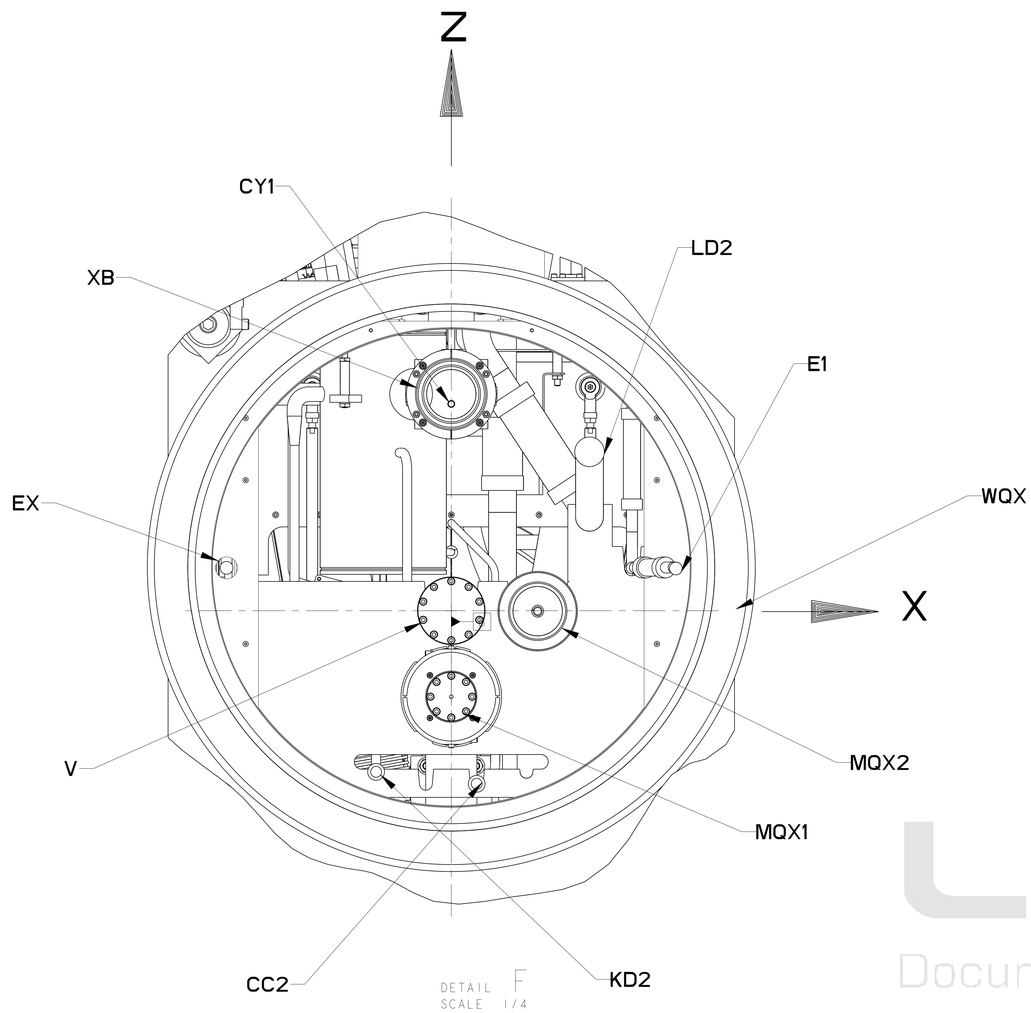


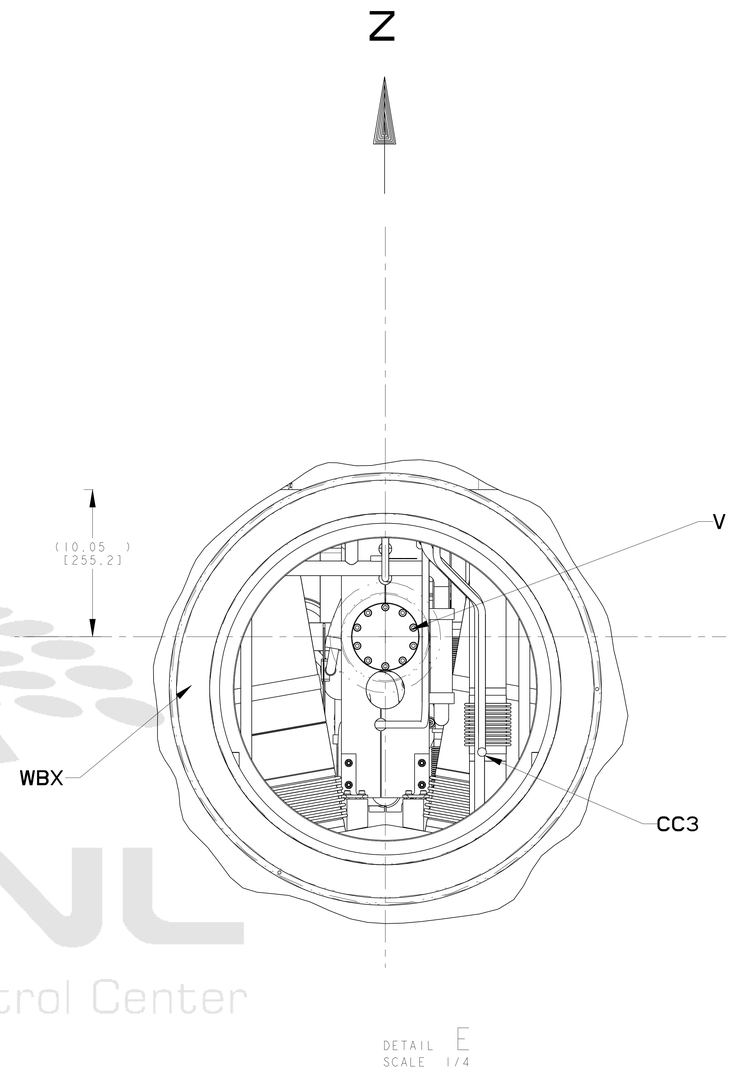


C

C

| Q3 PIPING INTERFACE PER SPEC. LHC-DFBX-ES-210.00 REV 1.0 | | | | | |
|---|---|---|---|---|---|
| DFBX | PIPE OD/ID | | PIPE COORDINATES AT 300 K | | |
| DFBX | OD in [ mm ] | ID in [ mm ] | X in [mm] ±.08 | Z in [mm] ±.08 | Y in [mm] ±.08 |
| V | 3.071 [78] | 2.913 [73.99] | .000 [0] | .000 [0] | -2.032 [-51.61] |
| LD2 | 1.748 [44.4] | 1.650 [41.91] | 9.444 [239.88] | 10.855 [275.72] | -6.299 [-159.99] |
| CC3 | .626 [15.9] | .528 [13.41] | 5.137 [130.48] | -11.822 [-300.28] | -6.299 [-159.99] |
| CC2 | .626 [15.9] | .528 [13.41] | 1.735 [44.07] | -11.822 [-300.28] | -6.299 [-159.99] |
| CY1 | .626 [15.9] | .528 [13.41] | .000 [0] | 14.126 [358.8] | -3.617 [-91.87] |
| E1 | 1.500 [38.1] | 1.370 [34.8] | 15.345 [389.76] | 2.885 [73.28] | -6.299 [-159.99] |
| EX | 1.500 [38.1] | 1.370 [34.8] | -15.355 [-390.02] | 2.929 [74.4] | -6.299 [-159.99] |
| MQX1 | 3.500 [88.9] | 3.370 [85.6] | .000 [0] | -5.871 [-149.12] | -6.299 [-159.99] |
| MQX2 | 3.500 [88.9] | 3.370 [85.6] | 5.902 [149.91] | -.031 [-0.79] | -6.299 [-159.99] |
| WQX | 41.535 [1055] | 35.039 [890] | .000 [0] | 2.953 [75.01] | .000 [0] |
| XB | 3.500 [88.9] | 3.370 [85.6] | .000 [0] | 14.792 [375.72] | -5.118 [-130] |

| D1 PIPING INTERFACE PER SPEC. LHC-DFBX-ES-230.00 REV 1.1 | | | | | |
|---|---|---|---|---|---|
| | PIPE OD/ID | | PIPE COORDINATES AT 300 K | | |
| DFBX | OD in [ mm ] | ID in [ mm ] | X in [mm] ±.08 | Z in [mm] ±.08 | Y in [mm] ±.08 |
| V | 3.06 [77.7] | 2.91 [73.9] | .000 [0] | .000 [0] | 13.504 [343] |
| CC3 | .63 [16] | .53 [13.5] | -6.604 [-167.74] | -7.879 [-200.13] | 14.843 [377.01] |
| WBX | 29.53 [750.1] | 23.50 [596.9] | .000 [0] | -3.528 [-89.61] | .000 [0] |

15

THIRD ANGLE PROJECTION

ERNEST ORLANDO LAWRENCE BERKELEY NATIONAL LABORATORY
UNIVERSITY OF CALIFORNIA - BERKELEY

LHC IR FEEDBOX
MAJOR ASSEMBLY
DFBXF (IP5,RIGHT) FEED BOX ASSY, IP5 (RIGHT)

| MICROFILMED: | DWG. TYPE | SHOWN ON | SCALE: 13/100 | DO NOT SCALE PRINTS |
|---|---|---|---|---|
| | ASSEM | - | SHEET 8 OF 11 | |
| PATENT CLEAR: | DESIGN ACCT. NO. | CATEGORY CODE | DWG. NO. | SIZE / REV. |
| | Z5LCE2 | LH2001 | 24C3956 | C |

DWG. NO. 24C3956 | SHT/TOT 8 | REV. C

LBNL Document Control Center

Officially Released to the LBNL Document Control Center
Released: March 5th, 2003 DCC Auth Key: 3BRK03163C

Downloaded by: Daniel Pulsifer at April 09, 2007 10:57:28

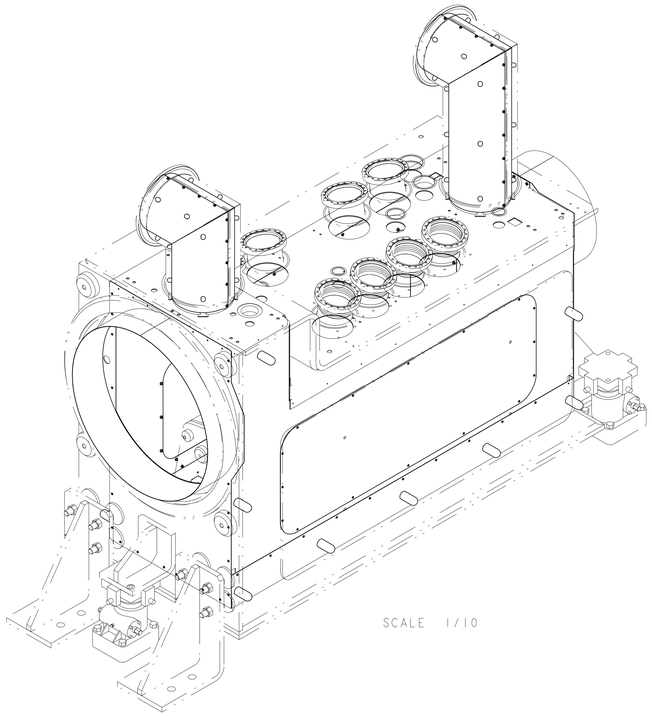


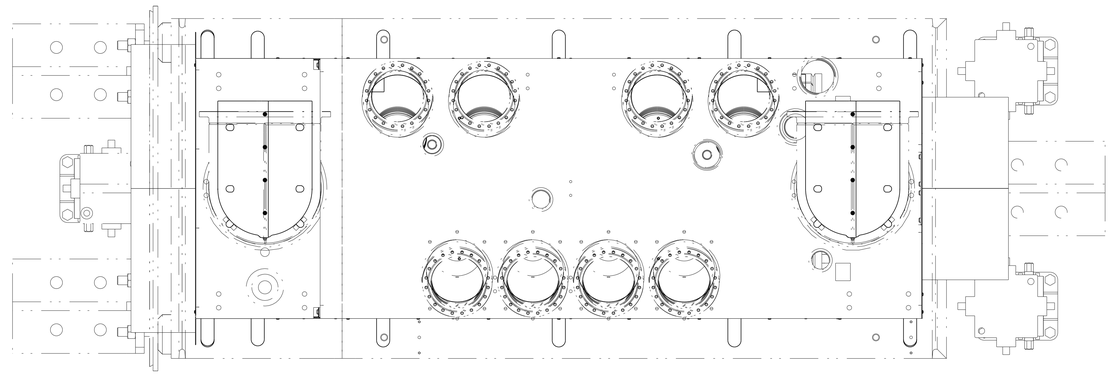

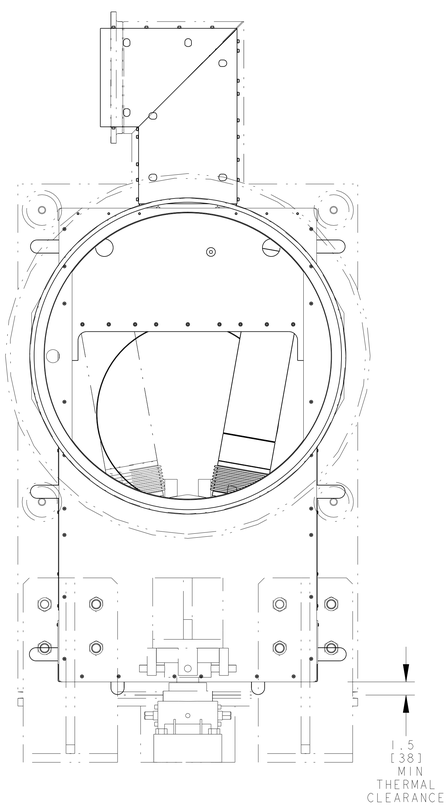


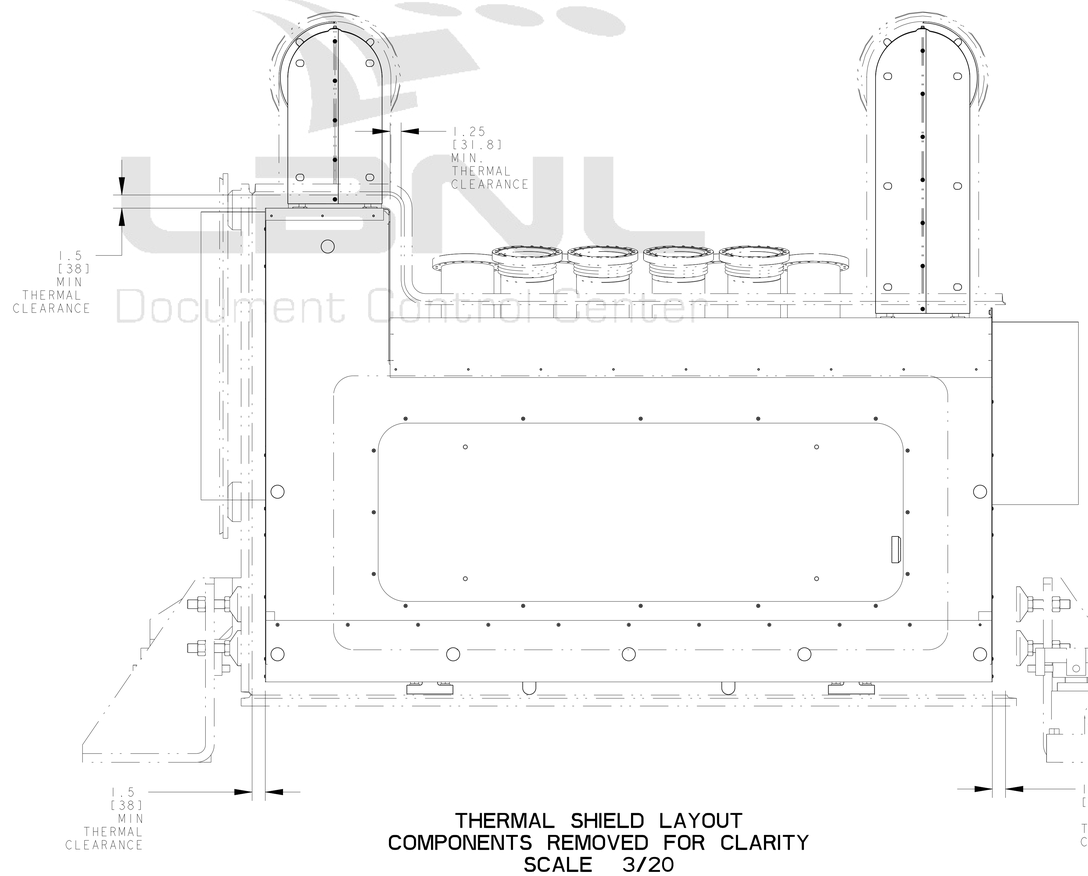


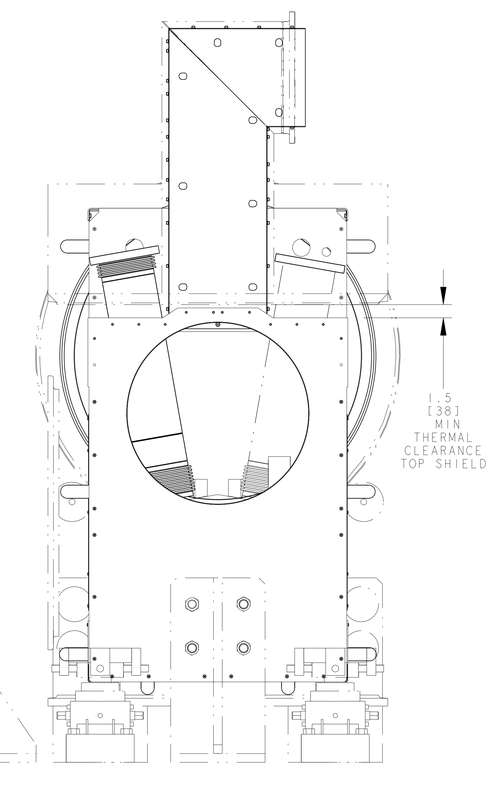


THERMAL SHIELD LAYOUT
COMPONENTS REMOVED FOR CLARITY
SCALE 3/20

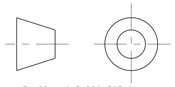


ERNEST ORLANDO LAWRENCE
BERKELEY NATIONAL LABORATORY
UNIVERSITY OF CALIFORNIA - BERKELEY

LHC IR FEEDBOX
MAJOR ASSEMBLY
DFBXF (IP5,RIGHT) FEED BOX ASSY, IP5 (RIGHT)

| MICROFILMED: | DWG. TYPE | SHOWN ON | SCALE: 1:3/100 | DO NOT SCALE PRINTS |
|---|---|---|---|---|
| | ASSEM | - | SHEET 9 OF 11 | |
| PATENT CLEAR: | DESIGN ACCT. NO. | CATEGORY CODE | DWG. NO. | SIZE / REV. |
| | Z5LCE2 | LH2001 | 24C3956 | C |

DWG. NO. 24C3956 SIZE C SHT 9

Officially Released to the LBNL Document Control Center
Released: March 5th, 2003 DCC Auth Key: 3BRK03163C

Downloaded by: Daniel Pulsifer at April 09, 2007 10:57:28

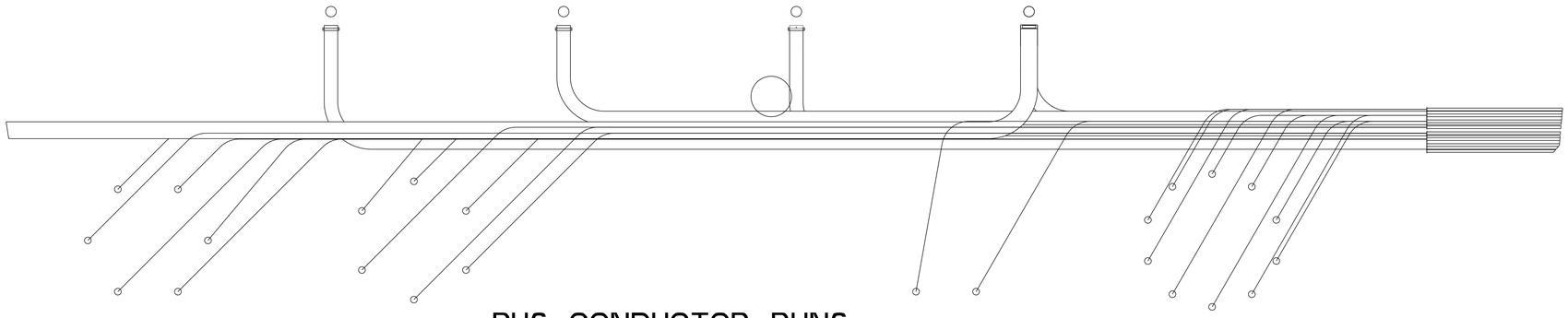

BUS CONDUCTOR RUNS

DETAIL N
SCALE 1/2

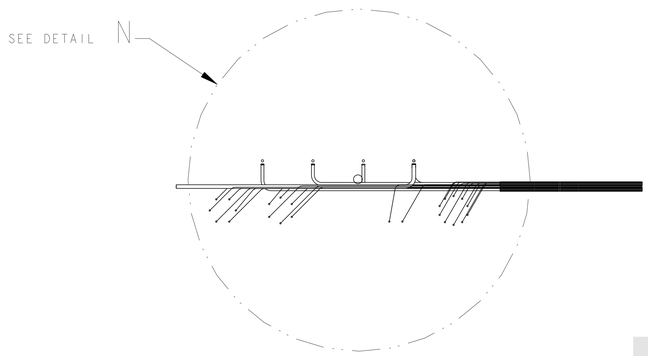


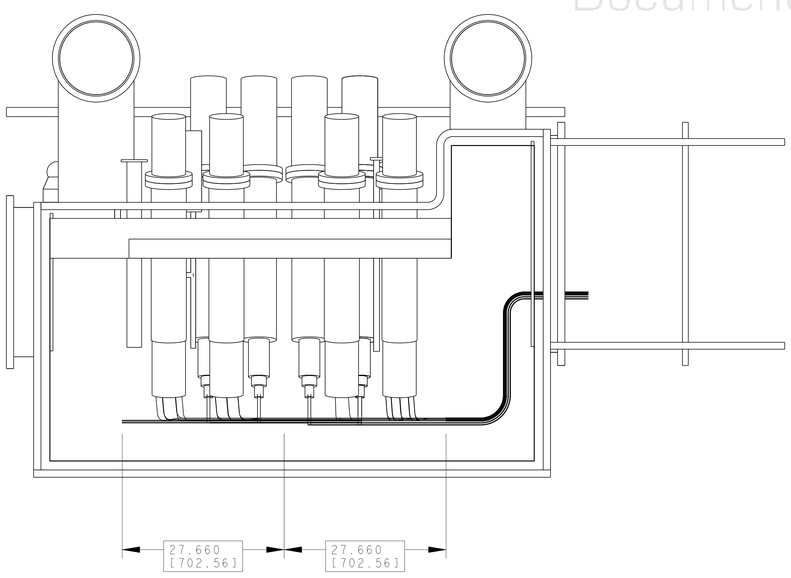


SCALE 1/10

LBNL
Document Control Center

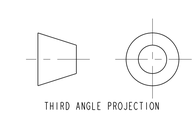


ERNEST ORLANDO LAWRENCE
BERKELEY NATIONAL LABORATORY
UNIVERSITY OF CALIFORNIA - BERKELEY

LHC IR FEEDBOX
MAJOR ASSEMBLY
DFBXF (IP5,RIGHT) FEED BOX ASSY, IP5 (RIGHT)

| MICROFILMED: | DWG. TYPE | SHOWN ON | SCALE: 13/100 | DO NOT SCALE PRINTS |
|---|---|---|---|---|
| | ASSEM | - | SHEET 10 OF 11 | |
| PATENT CLEAR: | DESIGN ACCT. NO. | CATEGORY CODE | DWG. NO. | SIZE / REV. |
| | Z5LCE2 | LH2001 | 24C3956 | C |

DWG. NO. 24C3956 SIZE C REV. 10

Officially Released to the LBNL Document Control Center
Released: March 5th, 2003 DCC Auth Key: 3BRK03163C
Downloaded by: Daniel Pulsifer at April 09, 2007 10:57:28

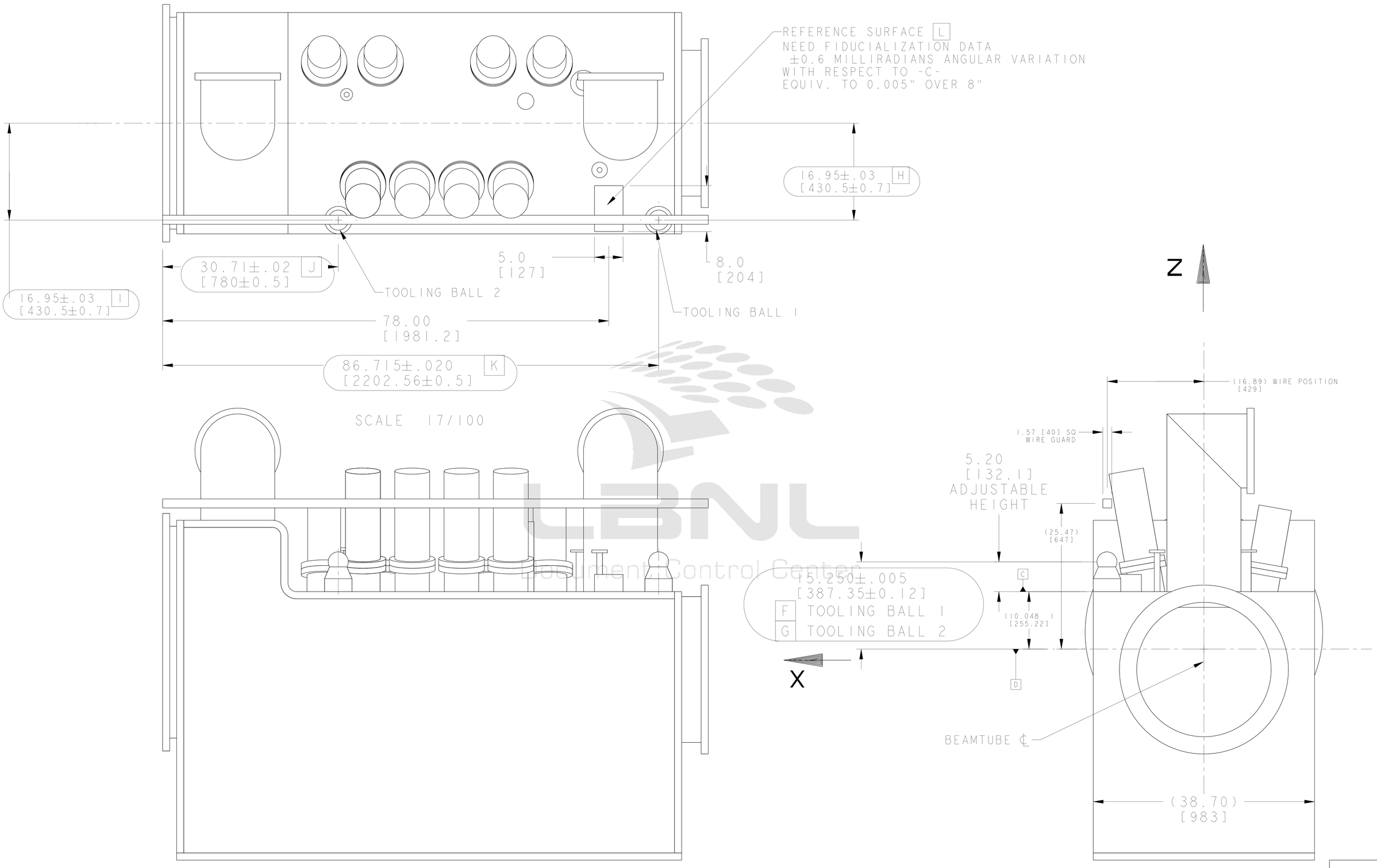


# FIDUCIAL LAYOUT INFORMATION

THIRD ANGLE PROJECTION

ERNEST ORLANDO LAWRENCE
BERKELEY NATIONAL LABORATORY
UNIVERSITY OF CALIFORNIA - BERKELEY

LHC IR FEEDBOX
MAJOR ASSEMBLY
DFBXF (IP5,RIGHT) FEED BOX ASSY, IP5 (RIGHT)

| MICROFILMED: | DWG. TYPE | SHOWN ON | SCALE: 13/100 | DO NOT SCALE PRINTS |
|---|---|---|---|---|
| | ASSEM | - | SHEET 11 OF 11 | |
| PATENT CLEAR: | DESIGN ACCT. NO. | CATEGORY CODE | DWG. NO. | SIZE / REV. |
| | Z5LCE2 | LH2001 | 24C3956 | C |

DWG. NO. 24C3956 SIZE C REV. 11

Officially Released to the LBNL Document Control Center
Released: March 5th, 2003 DCC Auth Key: 3BRK03I63C
Downloaded by: Daniel Pulsifer at April 09, 2007 10:57:28