REQ	ITEM	PART NUMBER	DESCRIPTION
1	-	-	304 SS 22"DIA X .75"THK

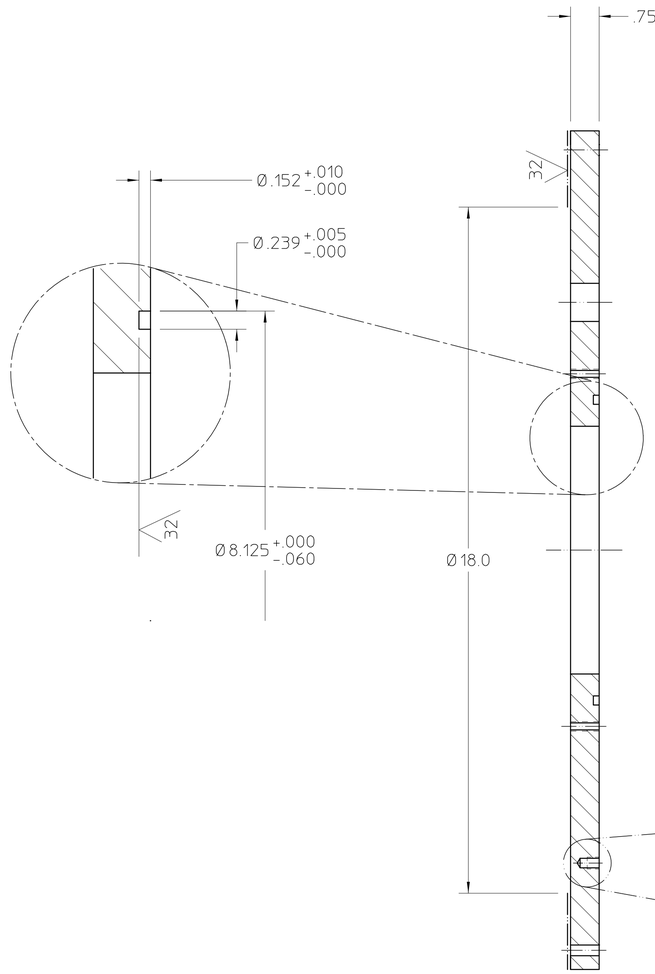

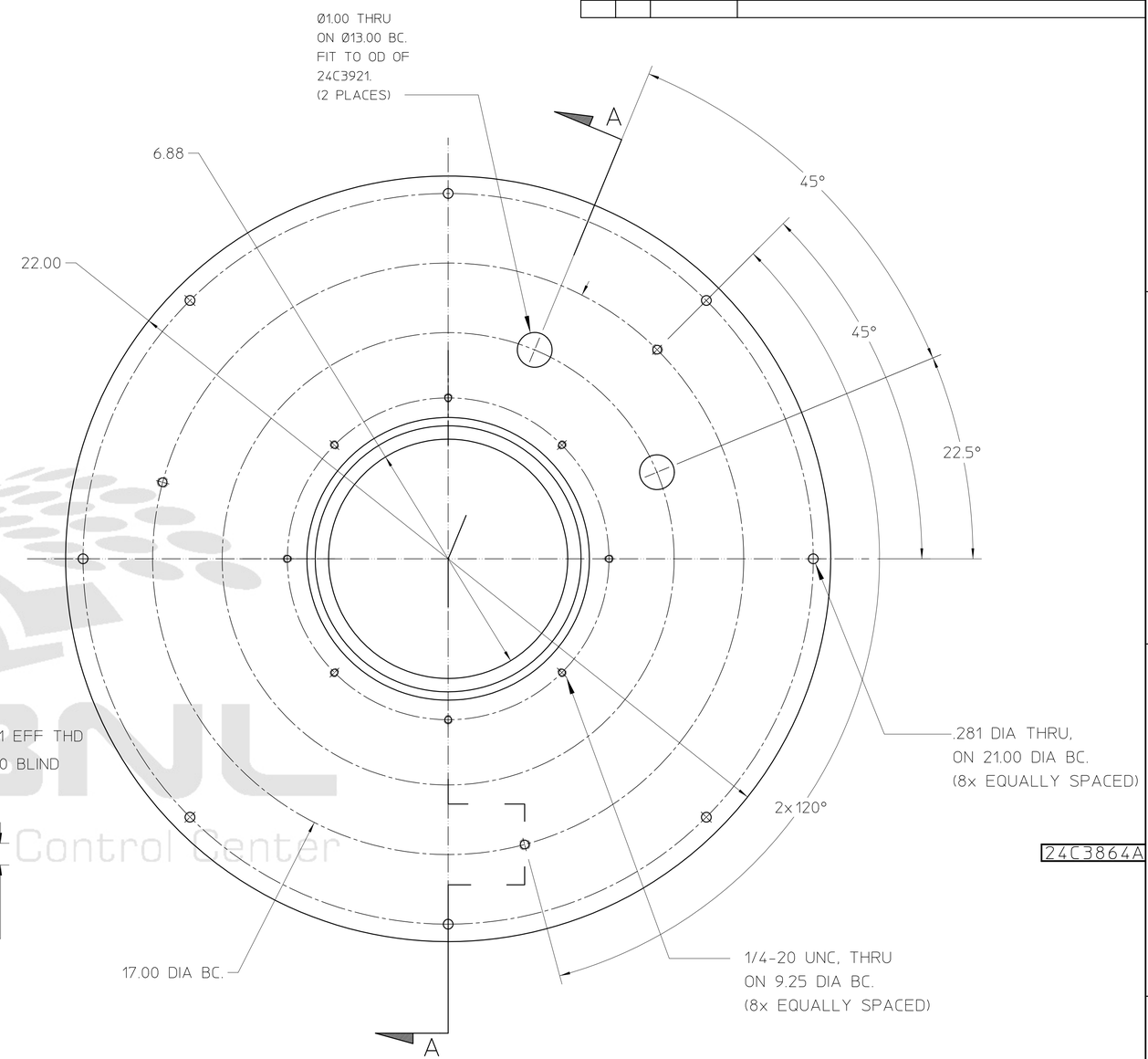

24C3864A

NOTES: UNLESS OTHERWISE SPECIFIED,

1. POSITIONAL TOLERANCES AND DATUM FEATURES OF SIZE APPLY REGARDLESS OF FEATURE SIZE.
2. USE OF SULFUR OR SILICONE BEARING OILS, LUBRICANTS OR COOLANTS ARE STRICTLY PROHIBITED.
3. USE OF RESIN OR RUBBER BONDED ABRASIVES UNDER POWER IS STRICTLY PROHIBITED. USE VITREOUS BONDED ABRASIVES ONLY.
4. PROTECT FINISHED PART BY BAGGING OR SIMILAR METHOD TO PROTECT AND MAINTAIN CLEANLINESS DURING SHIPMENT AND STORAGE.

SECTION A-A

REV	DWG	CHK	ZONE	DATE	CHANGES
A	RLM	-	C3	5.12.00	THRU HOLES FOR VACUUM FEED FROM .5 TO 1 DIA

UNLESS OTHERWISE SPECIFIED
TOLERANCES: .X ± .1 FRAC. ±1/64; .XX ± .01 ANGLES ± 1°; .XXX ± .005 FINISH 125√
THREADS ARE CLASS 2
CHAMFER ENDS OF ALL SCREW THREADS 30°.
CUT 1.5 PITCH THRD RELIEF WITH ROUND NOSE TOOL ON MACHINE CUT THREADS.
BREAK EDGES .016 MAX. ON MACHINED WORK.
REMOVE BURRS WELD SPLATTER & LOOSE SCALE
REFERENCES: ANSI Y14.5 & B46.1.

SHOP ORDERS
ACCT. NO. | SERIAL NO.
DATE ISSD | DATE REQD. | NO. REQD.
DELIVER TO
SURFACE TREATMENT: DEGREASE
IDENT. METH.: TAG
DWG BY: R. LA MANTIA | DATE 06-03-00
CHK. BY: J. ZBASNIK | DATE 00-00-00

LAWRENCE BERKELEY LABORATORY
UNIVERSITY OF CALIFORNIA-BERKELEY
LARGE HADRON COLLIDER, IR FEEDBOX
TEST
LID, LID ASSEMBLY

PATENT CLEAR	DWG. TYPE	SHOWN ON	SCALE	DO NOT SCALE PRINTS
	DETAIL	24C3756	HALF	

MICROFILMED	DESIGN ACCT. NO.	CATEGORY CODE	DWG. NO.	SIZE	REV.
	Z5LCE2	LH2005	24C3864		A

AUTO GENERATED PDF – Dec 14 2005 0:54:04 PST

Officially Released to the LBNL Document Control Center
Released: DCC Auth Key: IB9R58D2CC
Downloaded by: Daniel Pulsifer at April 10, 2007 07:43:46