Dwg. No. 24C3831 Size Rev

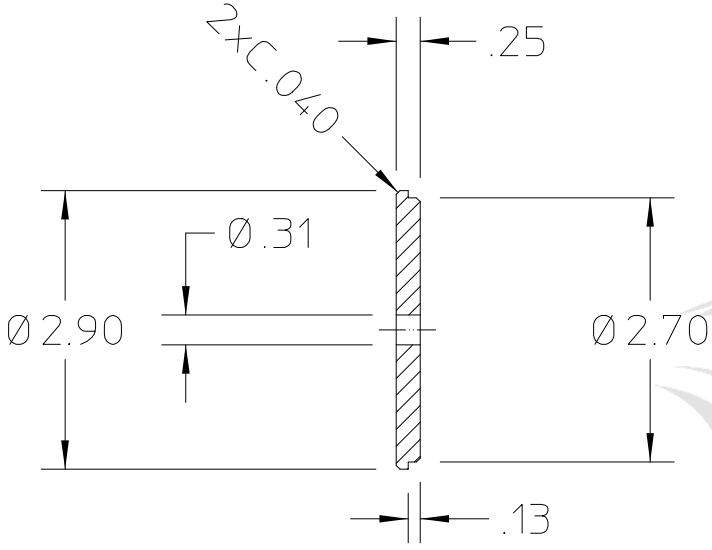

NOTES: UNLESS OTHERWISE SPECIFIED,

1. POSITIONAL TOLERANCES AND DATUM FEATURES OF SIZE APPLY REGARDLESS OF FEATURE SIZE.

2. USE OF SULFUR OR SILICONE BEARING OILS, LUBRICANTS OR COOLANTS ARE STRICTLY PROHIBITED.

3. USE OF RESIN OR RUBBER BONDED ABRASIVES UNDER POWER IS STRICTLY PROHIBITED. USE VITREOUS BONDED ABRASIVES ONLY.

4. PROTECT FINISHED PART BY BAGGING OR SIMILAR METHOD TO PROTECT AND MAINTAIN CLEANLINESS DURING SHIPMENT AND STORAGE.

LBNL Document Control Center

Material 304 SS			-	-	-	-	
Unless Otherwise Noted			Rev	Dwn	Date	Changes	
.X ± .1	.XX ± .010	.XXX ± .005	Angles ± 1°	LAWRENCE BERKELEY LABORATORY			
Break Edges .016 Max on Machined Work Remove Burrs Weld Splatter and Loose Scale References: ANSI Y 14.5 & B46.1				University of California - Berkeley			
				LARGE HADRON COLLIDER, IR FEEDBOX			
Account Number -	Finish ✓ 125			TEST			
Date Issued -	Date Reqd -			END CAP, HTS LEAD SIMULATOR			
Number Required -	Deliver To -		Shown on Dwg No. 24C3733				
Surface Treatment Degrease	Identific Method Tag		Patent Clear	Category Code LH-2005	Do not Scale Prints		
Drawn By R. LA MANTIA	Date 03-06-2000		Micro-Filmed	Drawing Scale HALF	Dwg. No. 24C3831	Size	Rev -
Check By J. ZBASNIK	Date 03-30-00		Design Account Z5LCE2	Drawing Type Detail			

Officially Released to the LBNL Document Control Center
Released: March 30th, 2000 DCC Auth Key: F9Y6ZZ1L9G

Downloaded by: Daniel Pulsifer at April 10, 2007 07:43:46

AUTO GENERATED PDF – Dec 14 2005 1:11:47 PST