Dwg. No. 24C3821 Size Rev

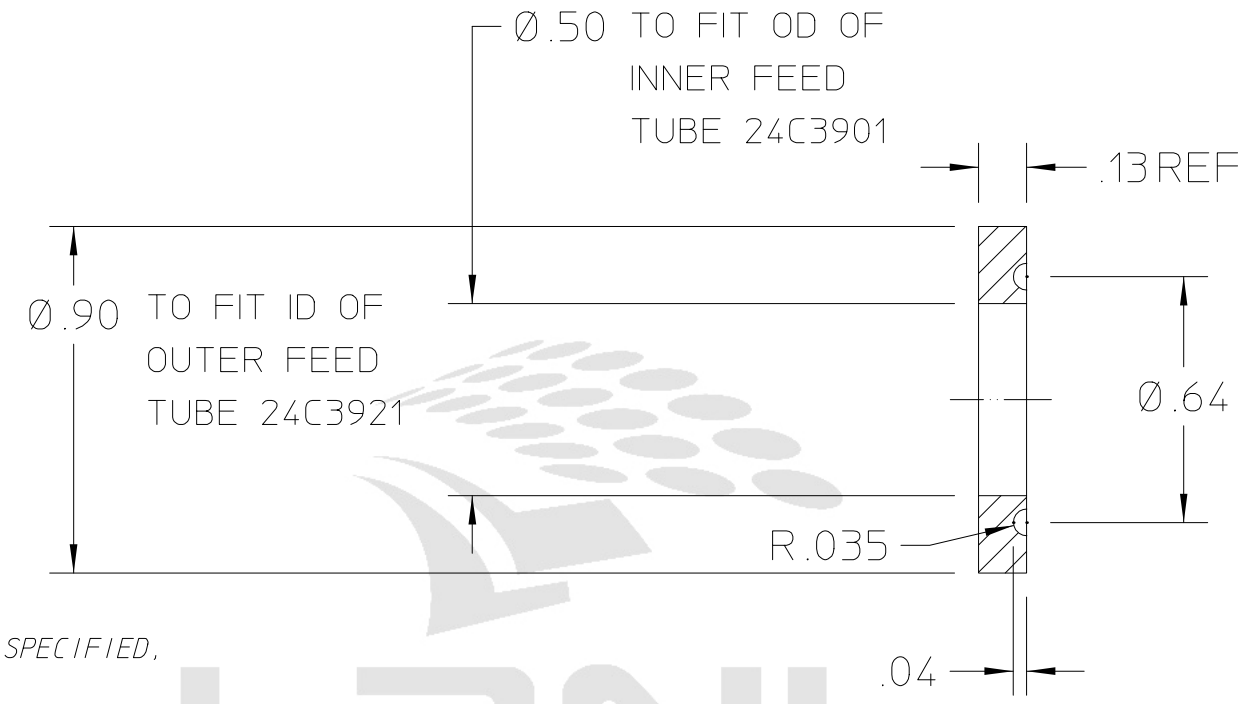

NOTES: UNLESS OTHERWISE SPECIFIED,

1. POSITIONAL TOLERANCES AND DATUM FEATURES OF SIZE APPLY REGARDLESS OF FEATURE SIZE.

2. USE OF SULFUR OR SILICONE BEARING OILS, LUBRICANTS OR COOLANTS ARE STRICTLY PROHIBITED.

3. USE OF RESIN OR RUBBER BONDED ABRASIVES UNDER POWER IS STRICTLY PROHIBITED. USE VITREOUS BONDED ABRASIVES ONLY.

4. PROTECT FINISHED PART BY BAGGING OR SIMILAR METHOD TO PROTECT AND MAINTAIN CLEANLINESS DURING SHIPMENT AND STORAGE.

Material SS .125" PLATE			-	-	-	-
Unless Otherwise Noted			Rev	Dwn	Date	Changes
.X ± .1	.XX ± .01	.XXX ± .005	Angles ± .5°	LAWRENCE BERKELEY LABORATORY		
Break Edges .016 Max on Machined Work Remove Burrs Weld Splatter and Loose Scale References: ANSI Y 14.5 & B46.1				University of California - Berkeley		
				LARGE HADRON COLLIDER, IR FEEDBOX		
Account Number -	Finish ✓ 125			TEST		
Date Issued -	Date Reqd -			CENTERING RING, LID ASSEMBLY		
Number Required -	Deliver To -			Shown on Dwg No. 24C3756		
Surface Treatment Degrease	Identific Method Tag			Patent Clear	Category Code LH-2005	Do not Scale Prints
Drawn By R. LA MANTIA	Date 03-31-00			Micro-Filmed	Drawing Scale HALF	Dwg. No. 24C3821 Size Rev -
Check By J. ZBASNIK	Date 04-04-00			Design Account Z5LCE2	Drawing Type Detail	

Officially Released to the LBNL Document Control Center
Released: April 4th, 2000 DCC Auth Key: NC9B3K9MYC

Downloaded by: Daniel Pulsifer at April 10, 2007 07:43:46

AUTO GENERATED PDF – Dec 14 2005 1:11:58 PST