Dwg. No. 24C3781A Size Rev

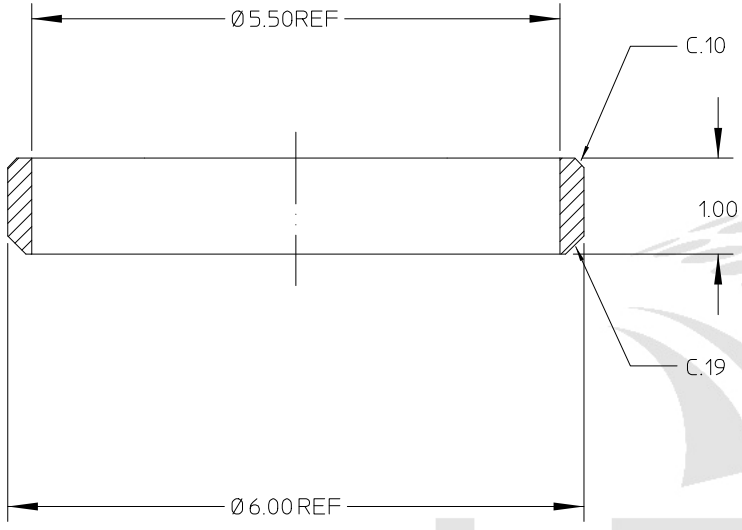

NOTES: UNLESS OTHERWISE SPECIFIED,

1. POSITIONAL TOLERANCES AND DATUM FEATURES OF SIZE APPLY REGARDLESS OF FEATURE SIZE.

2. USE OF SULFUR OR SILICONE BEARING OILS, LUBRICANTS OR COOLANTS ARE STRICTLY PROHIBITED.

3. USE OF RESIN OR RUBBER BONDED ABRASIVES UNDER POWER IS STRICTLY PROHIBITED. USE VITREOUS BONDED ABRASIVES ONLY.

4. PROTECT FINISHED PART BY BAGGING OR SIMILAR METHOD TO PROTECT AND MAINTAIN CLEANLINESS DURING SHIPMENT AND STORAGE.

LBNL Document Control Center

Material 304 SS TUBE, 6IN ODX.25THK, 1 LG	A	RLM	5.12.00	ID IS REF DIMENSION
Unless Otherwise Noted	Rev	Dwn	Date	Changes
.X ± .1 | .XX ± .01 | .XXX ± .005 | Angles ± 1°	LAWRENCE BERKELEY LABORATORY			
Break Edges .016 Max on Machined Work Remove Burrs Weld Splatter and Loose Scale References: ANSI Y 14.5 & B46.1	University of California - Berkeley			
	LARGE HADRON COLLIDER, IR FEEDBOX			
Account Number – / Finish √ 125	TEST			
Date Issued – / Date Reqd –	LEAD POSITION TUBE, LHe TANK SIMULATOR			
Number Required – / Deliver To –	Shown on Dwg No. 24C3724			
Surface Treatment Degrease / Identific Method Tag	Patent Clear / Category Code LH-2005	Do not Scale Prints		
Drawn By R. LA MANTIA / Date 03-06-2000	Micro-Filmed / Drawing Scale HALF	Dwg. No. 24C3781	Size	Rev A
Check By J. ZBASNIK / Date 03-30-2000	Design Account Z5LCE28 / Drawing Type Detail			

Officially Released to the LBNL Document Control Center
Released: March 30th, 2000 DCC Auth Key: 9E455CECY5

Downloaded by: Daniel Pulsifer at April 10, 2007 07:43:46

AUTO GENERATED PDF – Dec 14 2005 0:53:57 PST