REQ	ITEM	PART NUMBER	DESCRIPTION
1	1	24C3763	ALIGNMENT TUBE
1	2	24C3771	INNER FLANGE
1	3	24C3781	LEAD POSITION TUBE SIMULATOR
1	4	24C3791	END CAP
1	5	MDC 130031	CONFLAT FLANGE, REF F800600T
1	6	-	FORMED METAL BELLOWS 6"OD X 4"LG
1	7	24C3892	SEAT, GASKET

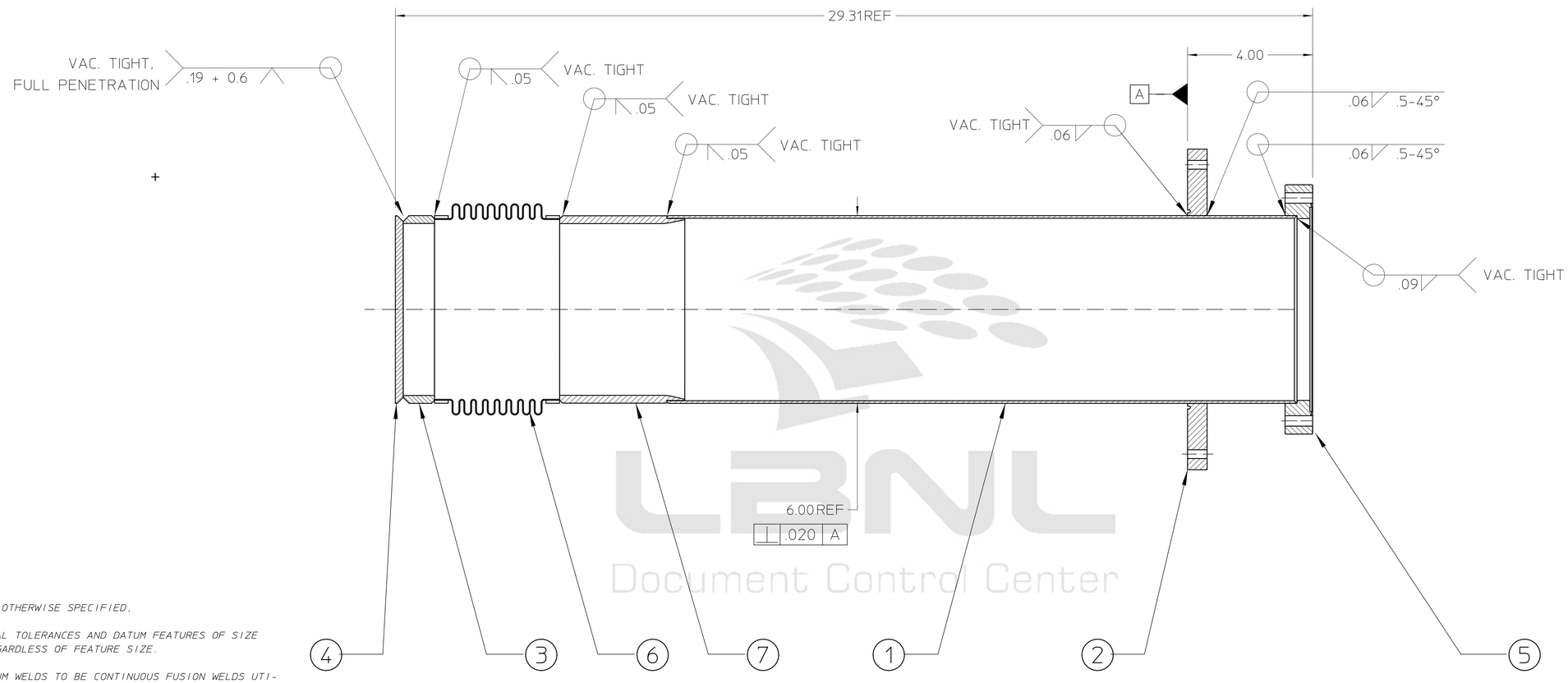

24C3724

NOTES: UNLESS OTHERWISE SPECIFIED,

1. POSITIONAL TOLERANCES AND DATUM FEATURES OF SIZE APPLY REGARDLESS OF FEATURE SIZE.

2. ALL VACUUM WELDS TO BE CONTINUOUS FUSION WELDS UTILIZING THE TIG PROCESS AND DONE IN A CLEAN FACILITY. NO FILLER ROD ALLOWED.

3. USE OF SULFUR OR SILICONE BEARING OILS, LUBRICANTS OR COOLANTS ARE STRICTLY PROHIBITED.

4. USE OF RESIN OR RUBBER BONDED ABRASIVES UNDER POWER IS STRICTLY PROHIBITED. USE VITREOUS BONDED ABRASIVES ONLY.

5. VACUUM CHECK WITH A HELIUM LEAK DETECTOR. THE LEAK RATE AT ANY LOCATION SHALL NOT EXCEED 1 X 10e-9 STD. CC/SEC.

6. DO NOT MACHINE THE VACUUM SEALING SURFACES TO ACHIEVE POSITIONAL TOLERANCES.

7. PROTECT FINISHED PART BY BAGGING OR SIMILAR METHOD TO PROTECT AND MAINTAIN CLEANLINESS DURING SHIPMENT AND STORAGE.

REV	DWG	CHK	ZONE	DATE	CHANGES

UNLESS OTHERWISE SPECIFIED

TOLERANCES: .X ± .1 — FRAC. ± 1/64; .XX ± .01 — ANGLES ± 1°; .XXX ± .005 — FINISH 125

THREADS ARE CLASS 2
CHAMFER ENDS OF ALL SCREW THREADS 30°.
CUT 1.5 PITCH THRD RELIEF WITH ROUND NOSE TOOL ON MACHINE CUT THREADS.
BREAK EDGES .016 MAX. ON MACHINED WORK.
REMOVE BURRS WELD SPLATTER & LOOSE SCALE
REFERENCES: ANSI Y14.5 & B46.1.

SHOP ORDERS

ACCT. NO.	SERIAL NO.	
DATE ISSD	DATE REQD.	NO. REQD.
DELIVER TO		
SURFACE TREATMENT	DEGREASE	
IDENT. METH.	TAG	
DWG. BY	R.LA MANTIA	DATE 03-06-00
CHK. BY	J. ZBASNIK	DATE 03-30-00

LAWRENCE BERKELEY LABORATORY
UNIVERSITY OF CALIFORNIA-BERKELEY

LARGE HADRON COLLIDER, IR FEEDBOX
TEST
LHe TANK SIMULATOR

PATENT CLEAR	DWG. TYPE	SHOWN ON	SCALE	DO NOT SCALE PRINTS
	ASSEMBLY	24C3716	HALF	
MICROFILMED	DESIGN ACCT. NO.	CATEGORY CODE	DWG. NO.	SIZE / REV.
	Z5LCE2	LH2005	24C3724	-

LBNL Document Control Center

Officially Released to the LBNL Document Control Center
Released: March 30th, 2000 DCC Auth Key: GD9T38Q73Y
Downloaded by: Daniel Pulsifer at April 10, 2007 07:43:45
AUTO GENERATED PDF – Dec 14 2005 1:11:26 PST