NOTE:
1. DERIVED FROM SPECIFICATION LHC-DFBX-ES-100
2. DERIVED FROM SPECIFICATION LHC-DFBX-ES-200
3. DERIVED FROM SPECIFICATION LHC-DFBX-ES-210
4. DERIVED FROM SPECIFICATION LHC-DFBX-ES-240
5. DERIVED FROM SPECIFICATION LHC-DFBX-ES-260
6. DERIVED FROM SPECIFICATION LHC-DFBX-ES-250
7. DERIVED FROM SPECIFICATION LHC-DFBX-ES-230
8. FILL MOUNTING HOLES WITH EPOXY
9. HTS CURRENT LEAD IN SPECIFICATION M923B

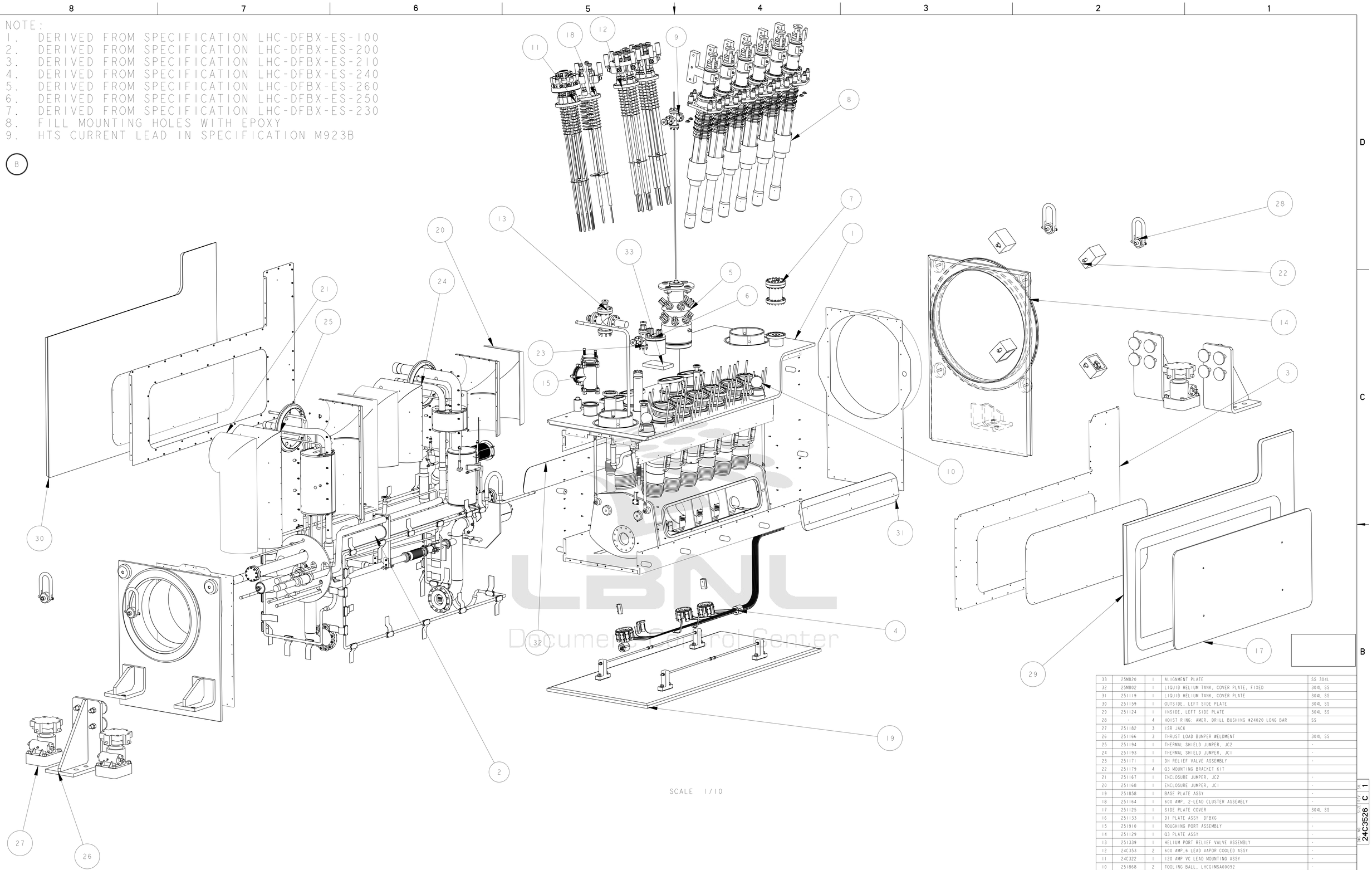

LBNL
Document Control Center

ITEM	PART NO	REQD	DESCRIPTION	MATERIAL
33	25M820	1	ALIGNMENT PLATE	SS 304L
32	25M802	1	LIQUID HELIUM TANK, COVER PLATE, FIXED	304L SS
31	251119	1	LIQUID HELIUM TANK, COVER PLATE	304L SS
30	251159	1	OUTSIDE, LEFT SIDE PLATE	304L SS
29	251124	1	INSIDE, LEFT SIDE PLATE	304L SS
28	-	4	HOIST RING: AMER. DRILL BUSHING #24020 LONG BAR	SS
27	251182	3	ISR JACK	
26	251166	3	THRUST LOAD BUMPER WELDMENT	304L SS
25	251194	1	THERMAL SHIELD JUMPER, JC2	-
24	251193	1	THERMAL SHIELD JUMPER, JC1	-
23	251171	1	DH RELIEF VALVE ASSEMBLY	-
22	251179	4	Q3 MOUNTING BRACKET KIT	
21	251167	1	ENCLOSURE JUMPER, JC2	-
20	251168	1	ENCLOSURE JUMPER, JC1	-
19	251858	1	BASE PLATE ASSY	-
18	251164	1	600 AMP, 2-LEAD CLUSTER ASSEMBLY	-
17	251125	1	SIDE PLATE COVER	304L SS
16	251133	1	D1 PLATE ASSY DFBXG	-
15	251910	1	ROUGHING PORT ASSEMBLY	-
14	251129	1	Q3 PLATE ASSY	-
13	251339	1	HELIUM PORT RELIEF VALVE ASSEMBLY	-
12	24C353	2	600 AMP,6 LEAD VAPOR COOLED ASSY	-
11	24C322	1	120 AMP VC LEAD MOUNTING ASSY	-
10	251868	2	TOOLING BALL, LHCGIMSA00092	-
9	251162	1	LHE DIAGNOSTIC ASSY	-
8	251156	6	PIRELLI HTS LEAD KIT	-
7	251851	1	HELIUM GUARD ASSEMBLY	-
6	251163	1	LBX DIAGNOSTIC ASSY	-
5	251831	1	LQX DIAGONSTIC ASSEMBLY	-
4	251864	1	BUS DUCT ASSEMBLY	-
3	251079	1	THERMAL SHIELD ASSY, DFBXG	-
2	251226	1	PIPING ASSEMBLY DFBXG, DFBXC	-
1	251137	1	DFBX C AND G	-

11. SOLDER JOINT USING SN60PB40 SOLDER; ROSIN FLUX, USE SPLICE PLATE IF REQUIRED
12. CLOSEOUT WELD PROCEDURE TO BE APPROVED BY LBNL
    DISTORTION CONTROL IS ESSENTIAL, ROOT PASS GTAW, COVER PASSES GMAW, SMAW, FCMAW.
13. WELD PROCEDURE TO BE APPROVED BY LBNL, USE GTAW PROCESS
14. BELLOWS TO BE WITHIN 0.03" OF FREE CONFIGURATION AFTER CLOSEOUT WELDING
15. DIMENSIONS FROM DFBX FLANGE FACE ON D1 SIDE, ADD -2367.2 MM TO OBTAIN POSITION RELEATIVE TO DFBX COORDINATE SYSTEM
16. SHIM TANK SUPPORTS TO LIMIT STATIC DEFLECTION OF THE LOWER TANK SUPPORT RODS TO LESS THAN 0.25"
17. DIMENSIONS SHOW IN INSPECTION OVAL ARE REFERENCED IN THE FABRICATION TRAVELER
18. COPPER STRAP ATTACHED TO THE THERMAL ANCHORS DO NOT HAVE TO BE EVENLY SPACED.
19. ALL DIMENSIONS GIVEN AT ROOM TEMPERATURE

THIRD ANGLE PROJECTION

REV	DWG	CHK	ZONE	DATE	CHANGES
C	JDR	DPO		02/24/03	CHANGED PIPE END POSITIONS, CHANGED WELD ON SIDE PLATE COVER
B	JDR	DPO		12/09/02	REMOVED NOTE 10; BOM CORRECTIONS SHEET 4 TOL CHANGE FROM .03 TO .08 ADD DATUM FLAGS
A	JDR	DPO		10/03/02	INITIAL RELEASE

UNLESS OTHERWISE SPECIFIED
TOLERANCES
X.X ± 0.1 FRAC. ± 1/64
X.XX ± 0.03 Angles ± 1.00°
X.XXX ± 0.010 FINISH 125 √RMS
DO NOT SCALE PRINT
THREADS ARE CLASS 2
CHAMFER ENDS OF ALL SCREW THREADS 30°
CUT ROUND, 1.5 THREAD RELIEF ON MACHINED THREADS
BREAK EDGES .016 MAX. ON MACHINED WORK
REMOVE BURRS, WELD SPLATTER & LOOSE SCALE
IN ACCORDANCE WITH ASME Y14.5M & BAL1

SHOP ORDERS
ACCT NO. / NO. / DATE
DEL NO. / REQD / DATE
ID / REQD / DATE
SURFACE TREATMT.
IDENT METHOD TAG
PROJECT NUMBER
PROJECT NAME N/A
DWG BY M J KNOLLS DATE 02-Nov-01
CHK BY Jon Zbasnik DATE 03-OCT-02
APR BY Jon Zbasnik DATE 03-OCT-02

ERNEST ORLANDO LAWRENCE BERKELEY NATIONAL LABORATORY
UNIVERSITY OF CALIFORNIA - BERKELEY

LHC IR FEEDBOX
MAJOR ASSEMBLY
DFBXC&G (IP2&8, LEFT) FEED BOX ASSY

MICROFILMED: | DWG. TYPE: ASSEM | SHOWN ON: - | SCALE: 1:3/100 | DO NOT SCALE PRINTS
PATENT CLEAR: | DESIGN ACCT. NO.: Z5LCE2 | CATEGORY CODE: LH2001 | DWG. NO.: 24C3526 | SIZE: C | REV.: C
SHEET 1 OF 11

DWG. NO. 24C3526 C 1

Officially Released to the LBNL Document Control Center
Released: March 5th, 2003 DCC Auth Key: V1B6I5U8DU
Downloaded by: Daniel Pulsifer at April 09, 2007 10:57:27

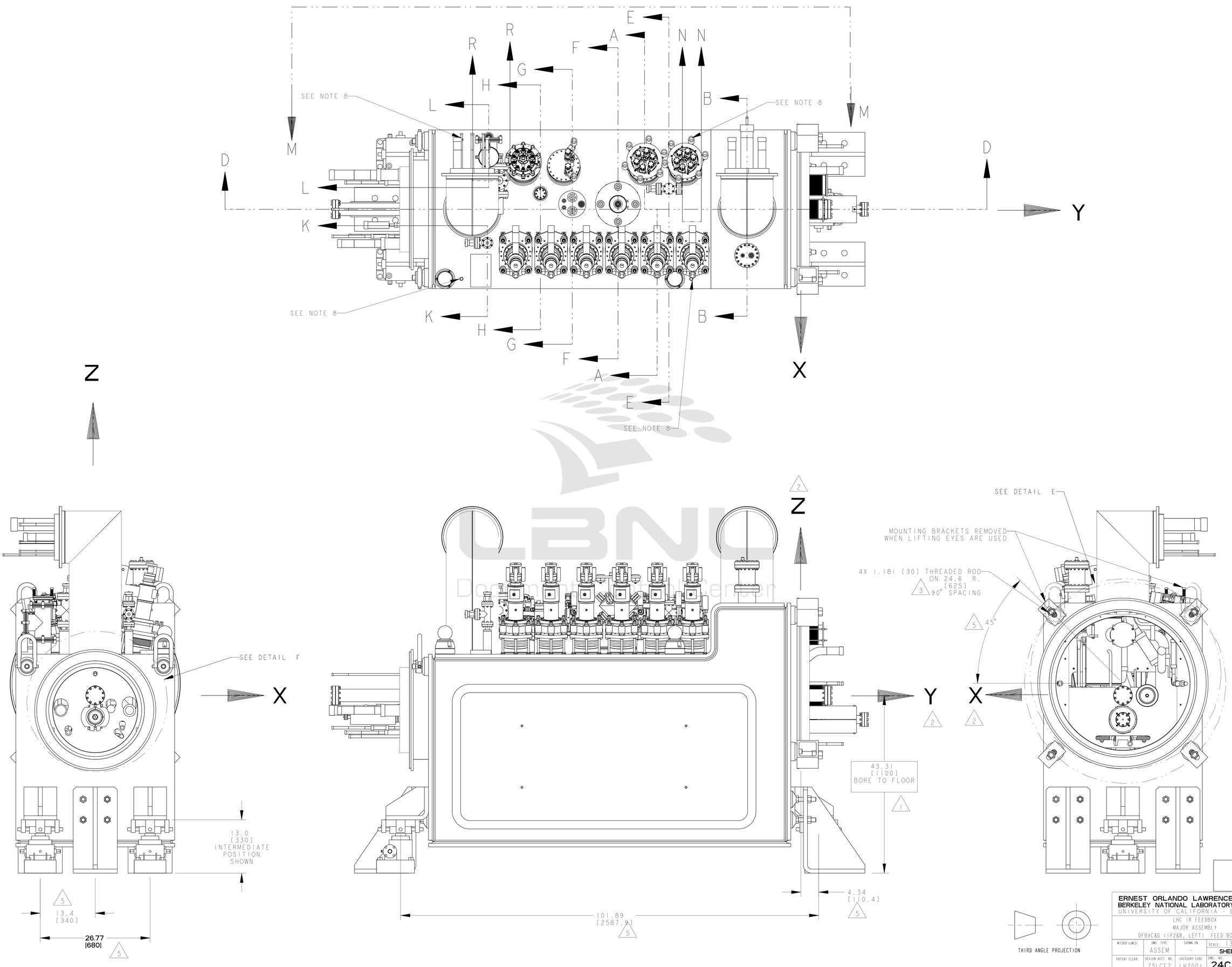

Officially Released to the LBNL Document Control Center
Released: March 5th, 2003 DCC Auth Key: V1B6I5U8DU
Downloaded by: Daniel Pulsifer at April 09, 2007 10:57:27

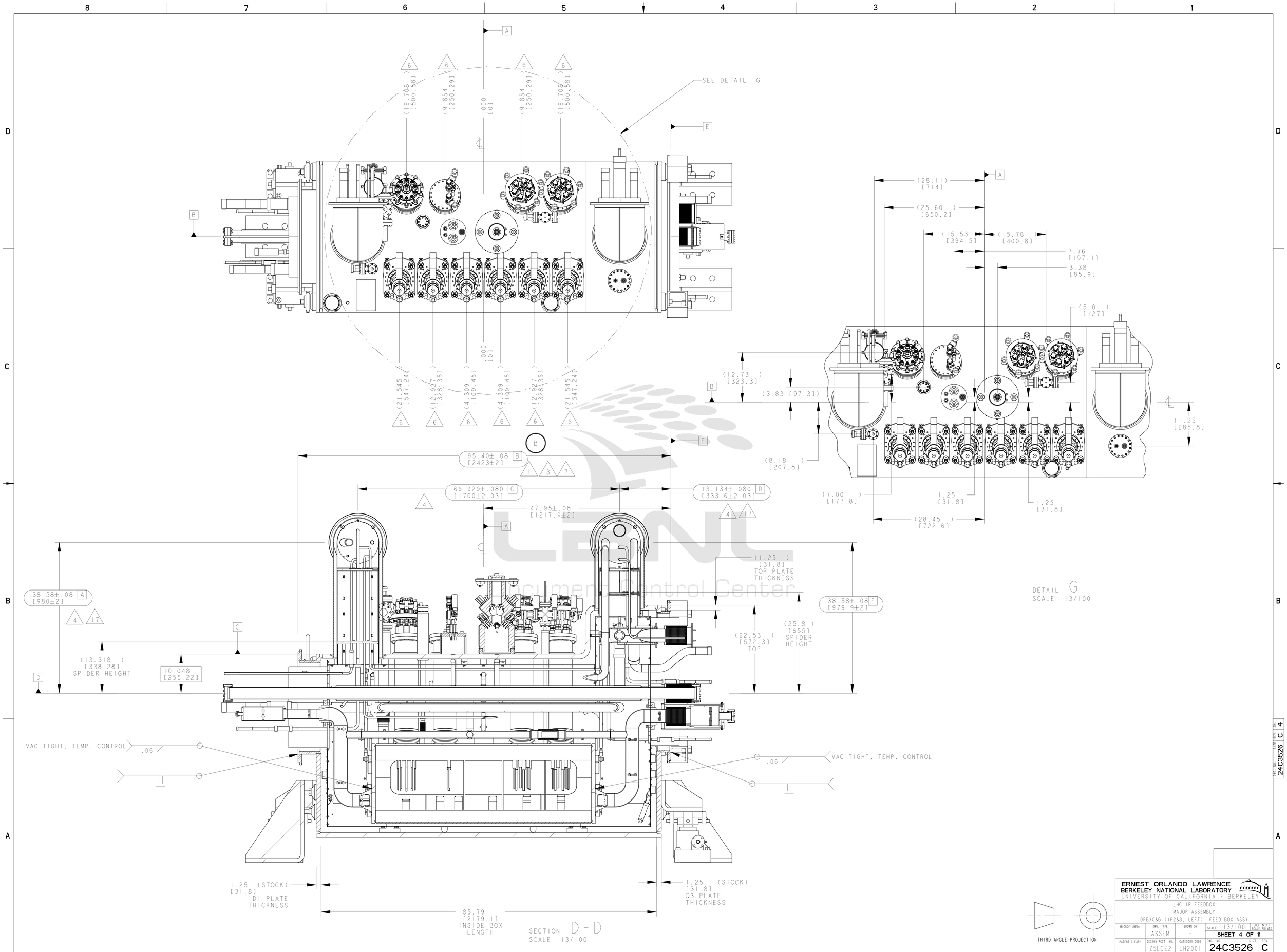

Officially Released to the LBNL Document Control Center
Released: March 5th, 2003 DCC Auth Key: V1B6I5U8DU
Downloaded by: Daniel Pulsifer at April 09, 2007 10:57:27

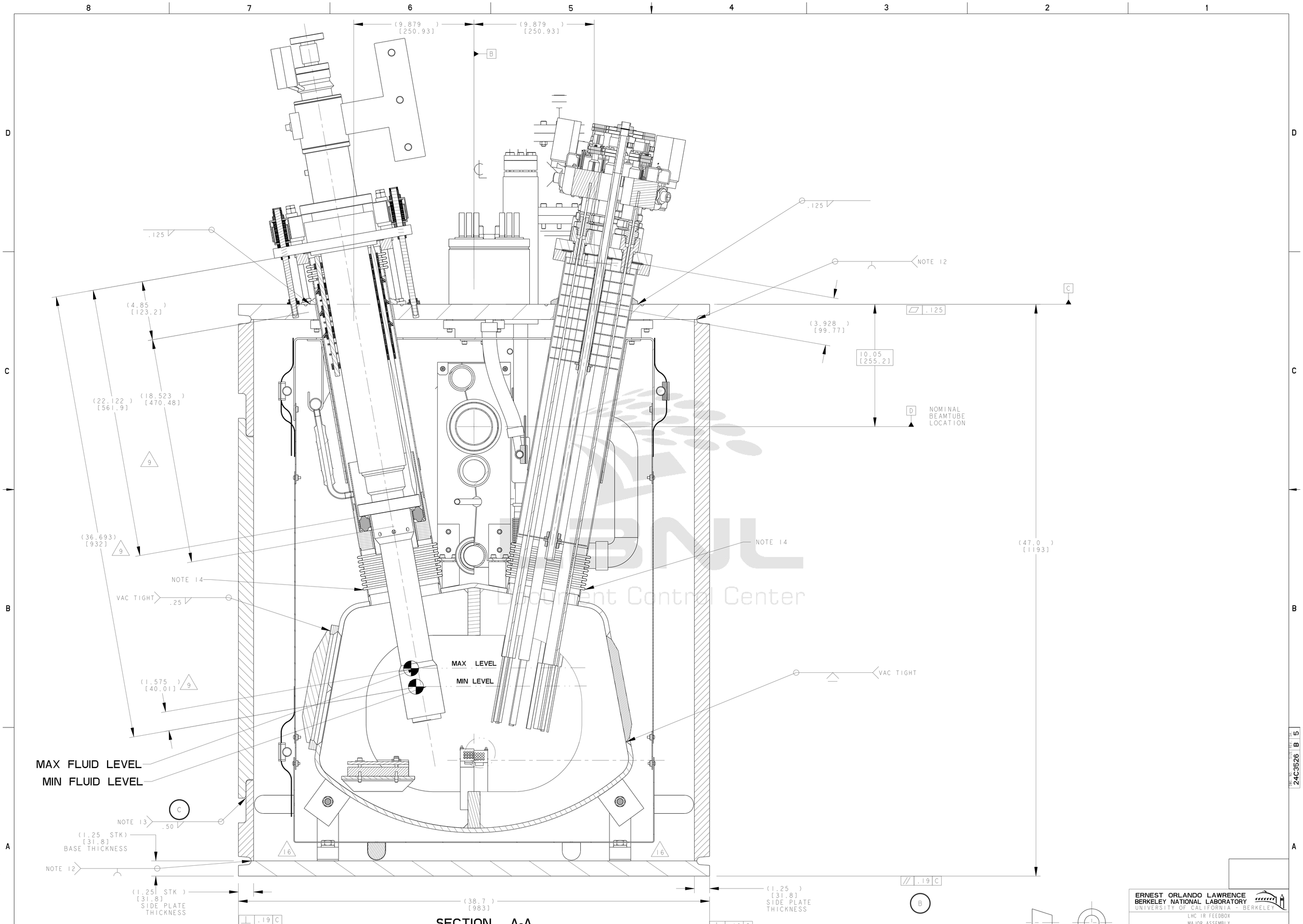

SECTION A-A
HTS AND VAPOR COOLED LEAD LAYOUT
SCALE 2/5

ERNEST ORLANDO LAWRENCE BERKELEY NATIONAL LABORATORY
UNIVERSITY OF CALIFORNIA - BERKELEY

LHC IR FEEDBOX
MAJOR ASSEMBLY
DFBXC FEED BOX ASSY SKEL

MICROFILMED:	DWG. TYPE PART	SHOWN ON	SCALE: 3/50	DO NOT SCALE PRINTS
			SHEET 5 OF 11	
PATENT CLEAR:	DESIGN ACCT. NO. Z5LCE2	CATEGORY CODE LH2001	DWG. NO. 24C3526	SIZE B REV.

DWG. NO. 24C3526 SIZE B REV. 5

Officially Released to the LBNL Document Control Center
Released: March 5th, 2003 DCC Auth Key: V1B6I5U8DU
Downloaded by: Daniel Pulsifer at April 09, 2007 10:57:27

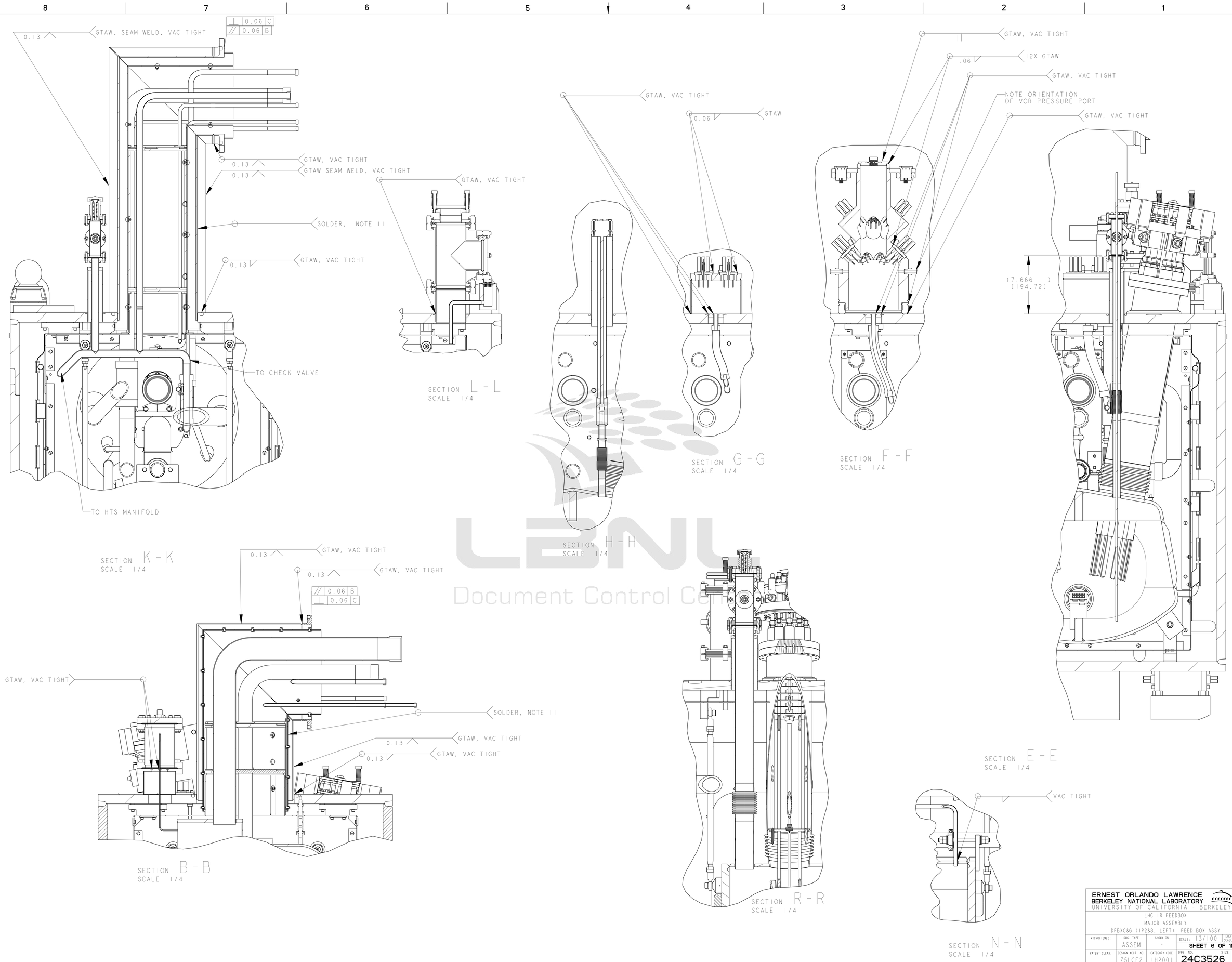

LBNL Document Control Center

Officially Released to the LBNL Document Control Center
Released: March 5th, 2003 DCC Auth Key: V1B6I5U0DU
Downloaded by: Daniel Pulsifer at April 09, 2007 10:57:27

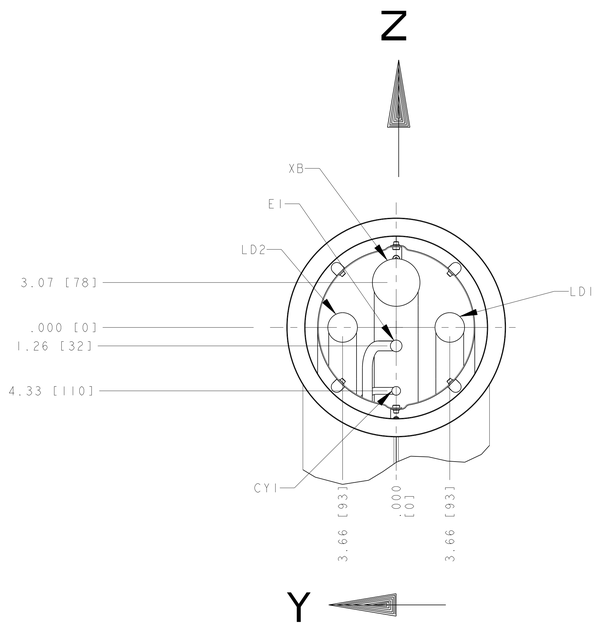

		DIM'S MEASURED FROM FLANGE CENTER	
PIPE	X	Y ±0.08	Z ±0.08
XB	-11.85±.08 [301±2]	0	3.07 [78]
LD2	-11.85±.08 [301±2]	3.66 [93]	0
LD1	-11.85±.08 [301±2]	-3.66 [93]	0
E1	-14.45±.08 [367±2]	0	-1.26 [32]
CY1	-14.45±.08 [367±2]	0	-4.33 [110]

4

DETAIL C
JC1 / QQSC
DIMENSIONAL TOLERANCE ± 0.08
ORIENTATION OPPOSITE OF SPECIFICATION 240
SCALE 1/4

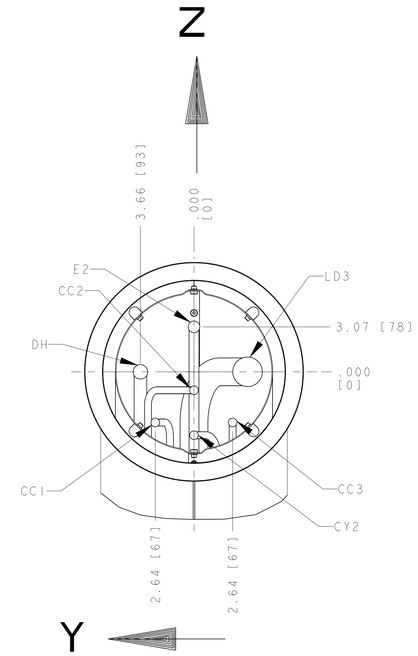

		DIM'S MEASURED FROM FLANGE CENTER	
PIPE	X	Y ±0.08	Z ±0.08
E2	-14.45±.08 [367±2]	0	3.07 [78]
DH	-14.45±.08 [367±2]	3.66 [93]	0
LD3	-11.85±.08 [301±2]	-3.66) [93]	0
CC2	-14.45±.08 [367±2]	0	-1.26 [32]
CC1	-14.45±.08 [367±2]	2.64 [67]	-3.46 [88]
CC3	-14.45±.08 [367±2]	-2.64 [67]	-3.46 [88]
CY2	-14.45±.08 [367±2]	0	-4.33 [110]

4

DETAIL D
JC2 / QQSD
DIMENSIONAL TOLERANCE ± 0.08
ORIENTATION OPPOSITE OF SPECIFICATION 240
SCALE 1/4

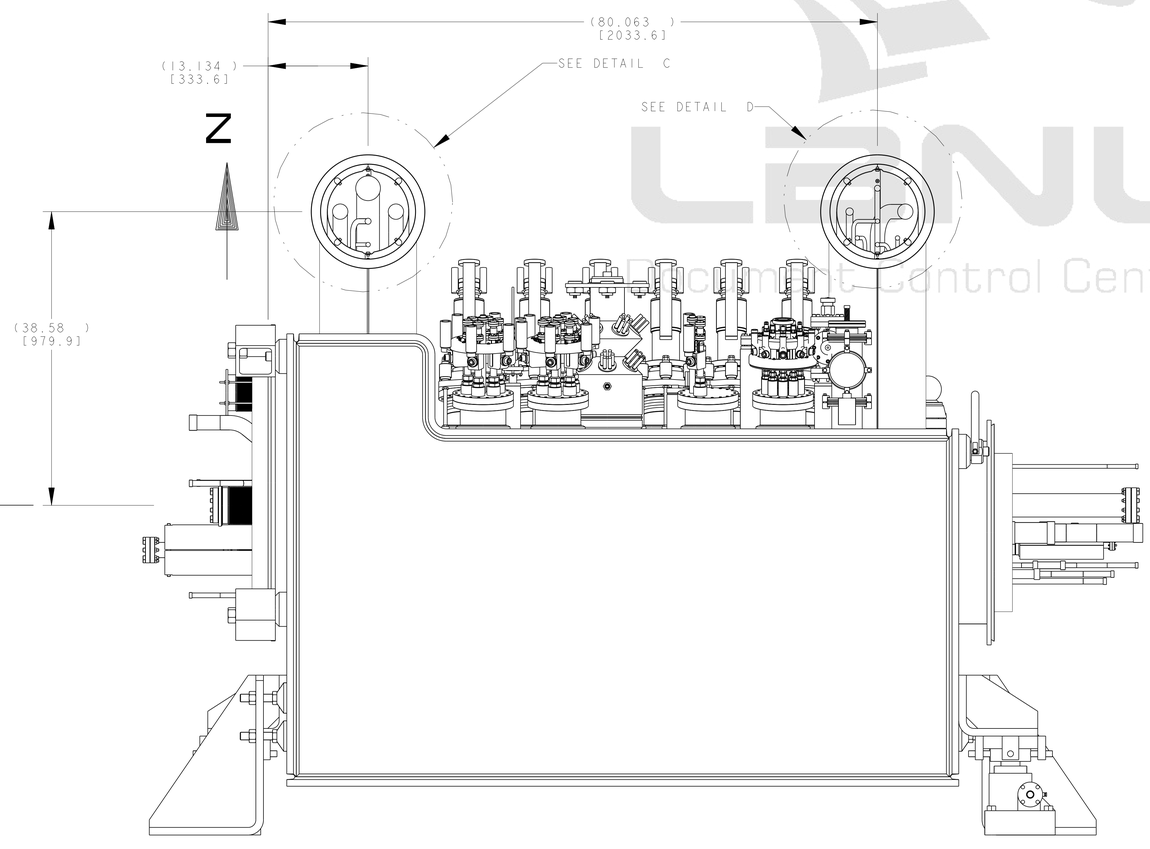

VIEW M - M
ROTATED 180°

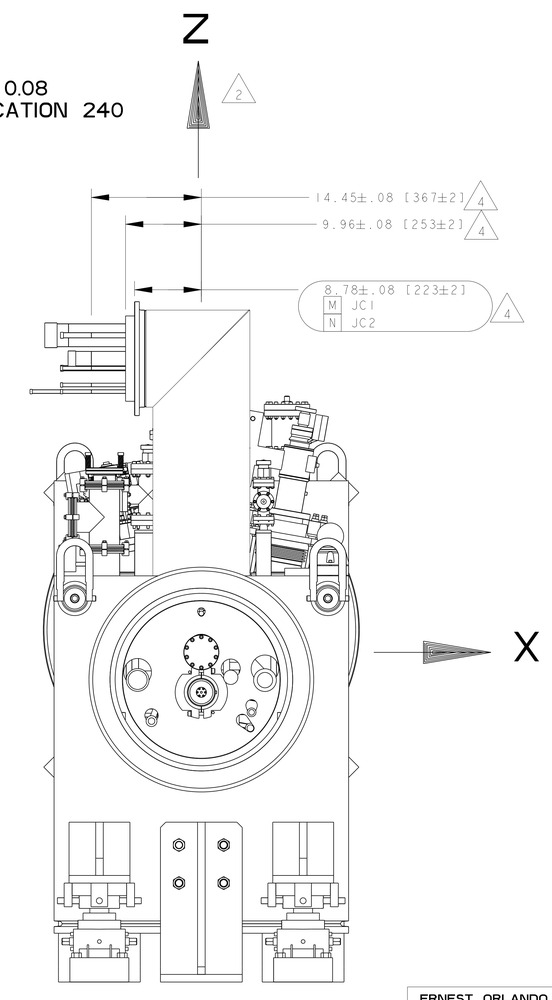

THIRD ANGLE PROJECTION

ERNEST ORLANDO LAWRENCE
BERKELEY NATIONAL LABORATORY
UNIVERSITY OF CALIFORNIA - BERKELEY

LHC IR FEEDBOX
MAJOR ASSEMBLY
DFBXC FEED BOX ASSY SKEL

MICROFILMED:	DWG. TYPE	SHOWN ON	SCALE: 3/50	DO NOT SCALE PRINTS
	PART	.	SHEET 7 OF 11	
PATENT CLEAR:	DESIGN ACCT. NO.	CATEGORY CODE	DWG. NO.	SIZE / REV.
	Z5LCE2	LH2001	24C3526	B

DWG. NO. 24C3526 SIZE B SHT 7

Officially Released to the LBNL Document Control Center
Released: March 5th, 2003 DCC Auth Key: V1B6I5U8DU
Downloaded by: Daniel Pulsifer at April 09, 2007 10:57:27

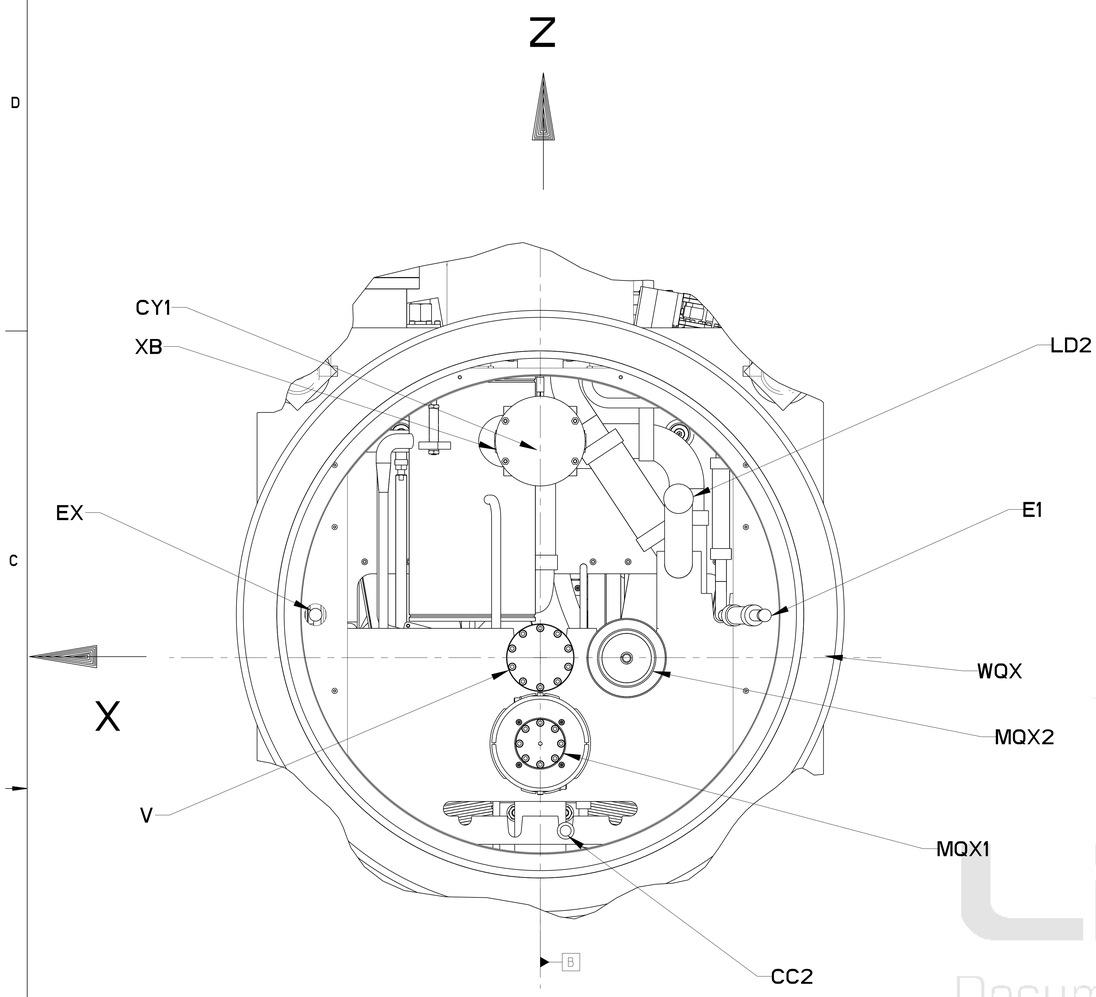

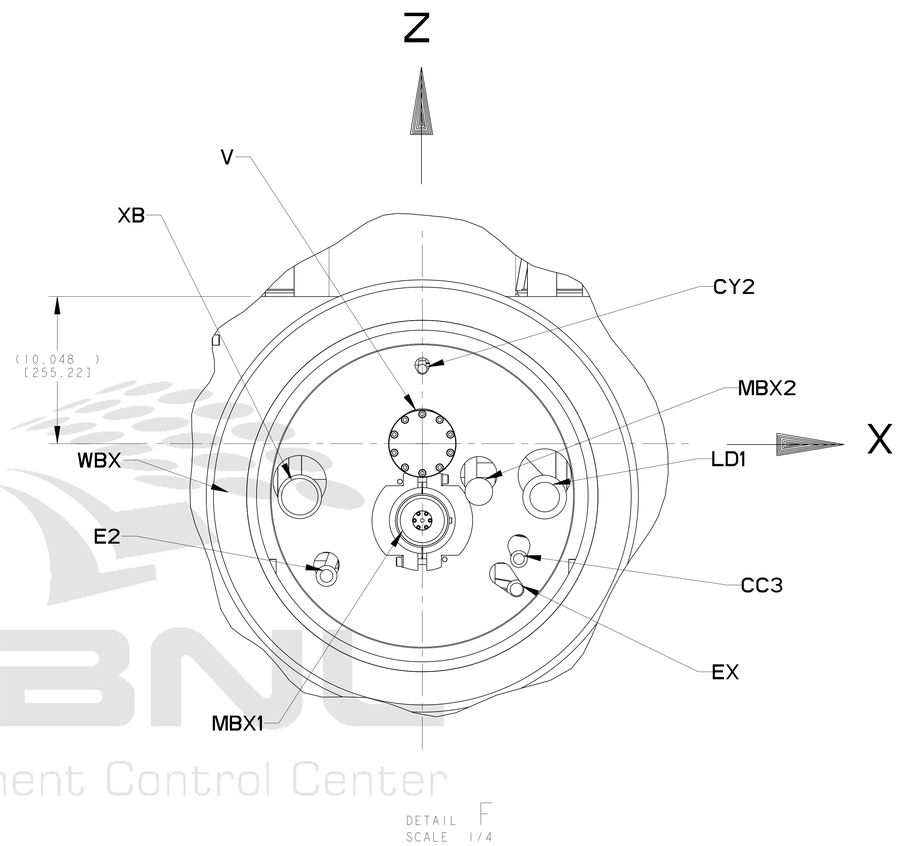

LBNL
Document Control Center

C

C

Q3 PIPING INTERFACE PER SPEC. LHC-DFBX-ES-210.00 REV 1.0					
DFBX	PIPE OD/ID		PIPE COORDINATES AT 300 K		
DFBX	OD in [mm]	ID in [mm]	X in [mm] ±.08	Z in [mm] ±.08	Y in [mm] ±.08
V	3.071 [78]	2.913 [73.99]	.000 [0]	.000 [0]	2.032 [51.61]
LD2	1.748 [44.4]	1.650 [41.91]	-9.444 [-239.88]	10.855 [275.72]	6.299 [159.99]
CC3	.626 [15.9]	.528 [13.41]	1.735 [44.07]	-11.822 [-300.28]	6.299 [159.99]
CC2	.626 [15.9]	.528 [13.41]	-1.735 [-44.07]	-11.822 [-300.28]	6.299 [159.99]
CY1	.626 [15.9]	.528 [13.41]	.000 [0]	14.126 [358.8]	3.617 [91.87]
E1	1.500 [38.1]	1.370 [34.8]	-15.345 [-389.76]	2.885 [73.28]	6.299 [159.99]
EX	1.500 [38.1]	1.370 [34.8]	15.355 [390.02]	2.929 [74.4]	6.299 [159.99]
MQX1	3.500 [88.9]	3.370 [85.6]	.000 [0]	-5.871 [-149.12]	6.299 [159.99]
MQX2	3.500 [88.9]	3.370 [85.6]	-5.902 [-149.91]	-.031 [-0.79]	6.299 [159.99]
WQX	41.535 [1055]	35.039 [890]	.000 [0]	2.953 [75.01]	.000 [0]
XB	3.500 [88.9]	3.370 [85.6]	.000 [0]	14.792 [375.72]	5.118 [130]

D1 PIPING INTERFACE PER SPEC. LHC-DFBX-ES-230.00 REV 1.1					
DFBX	PIPE OD/ID		PIPE COORDINATES AT 300 K		
DFBX	OD in [mm]	ID in [mm]	X in [mm] ±.08	Z in [mm] ±.08	Y in [mm] ±.08
V	3.06 [77.7]	2.91 [73.9]	.000 [0]	.000 [0]	-13.504 [-343]
LD1	1.75 [44.5]	1.66 [42.2]	8.359 [212.32]	-3.650 [-92.71]	-13.465 [-342.01]
CC2	.63 [16]	.53 [13.5]	5.429 [137.9]	.811 [20.6]	-14.843 [-377.01]
END TRANSITION	.50 [12.7]	.41 [10.4]			
CC3	.63 [16]	.53 [13.5]	6.604 [167.74]	-7.879 [-200.13]	-14.843 [-377.01]
CY2	.63 [16]	.53 [13.5]	.000 [0]	5.114 [129.9]	-14.843 [-377.01]
END TRANSITION	.50 [12.7]	.41 [10.4]			
Ex	1.50 [38.1]	1.38 [35.1]	6.441 [163.6]	-9.963 [-253.06]	-11.693 [-297]
E2	1.50 [38.1]	1.38 [35.1]	-6.546 [-166.27]	-9.036 [-229.51]	-11.693 [-297]
MBX1	3.50 [88.9]	3.38 [85.9]	.000 [0]	-5.249 [-133.32]	-3.780 [-96.01]
MBX2	.50 [12.7]	.38 [9.7]	3.862 [98.09]	-3.279 [-83.29]	-5.465 [-138.81]
END TRANSITION	1.47 [37.3]	1.34 [34]			
WBX	29.53 [750.1]	23.50 [596.9]	.000 [0]	-3.528 [-89.61]	.000 [0]
XB	2.88 [73.2]	2.72 [69.1]	-8.373 [-212.67]	-3.626 [-92.1]	-13.465 [-342.01]
END TRANSITION	2.00 [50.8]	1.88 [47.8]			

15

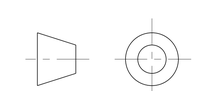

THIRD ANGLE PROJECTION

ERNEST ORLANDO LAWRENCE
BERKELEY NATIONAL LABORATORY
UNIVERSITY OF CALIFORNIA - BERKELEY

LHC IR FEEDBOX
MAJOR ASSEMBLY
DFBXC FEED BOX ASSY SKEL

MICROFILMED:	DWG. TYPE	SHOWN ON	SCALE: 3/50	DO NOT SCALE PRINTS
	PART		SHEET 8 OF 11	
PATENT CLEAR:	DESIGN ACCT. NO.	CATEGORY CODE	DWG. NO.	SIZE / REV.
	Z5LCE2	LH2001	24C3526	B

DWG. NO. 24C3526 | SIZE B | REV. 8

Officially Released to the LBNL Document Control Center
Released: March 5th, 2003 DCC Auth Key: V1B6I5U8DU
Downloaded by: Daniel Pulsifer at April 09, 2007 10:57:27

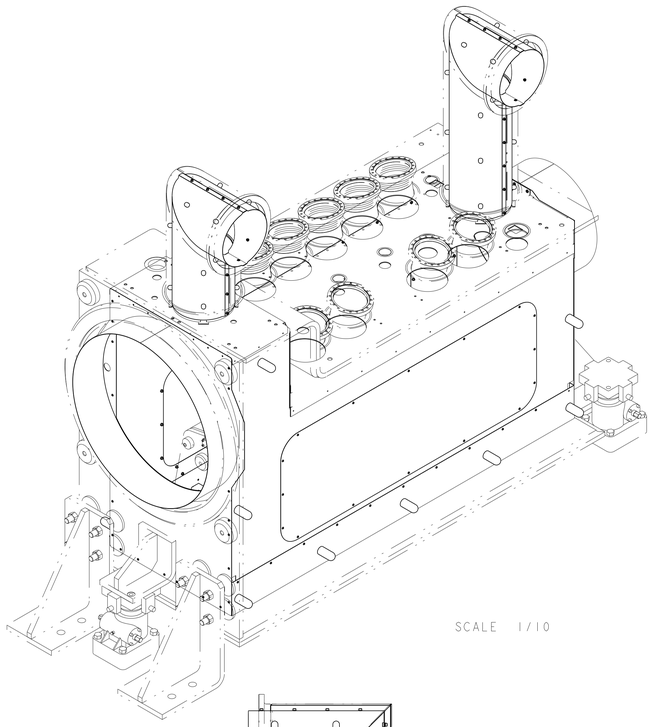

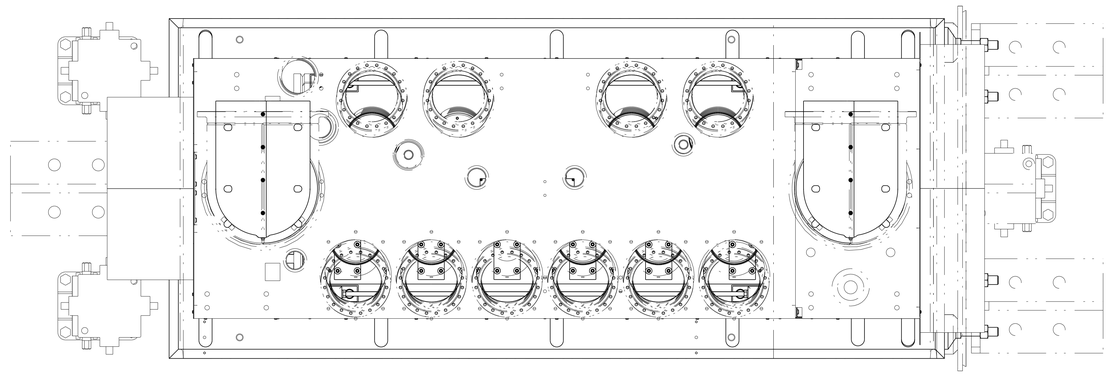

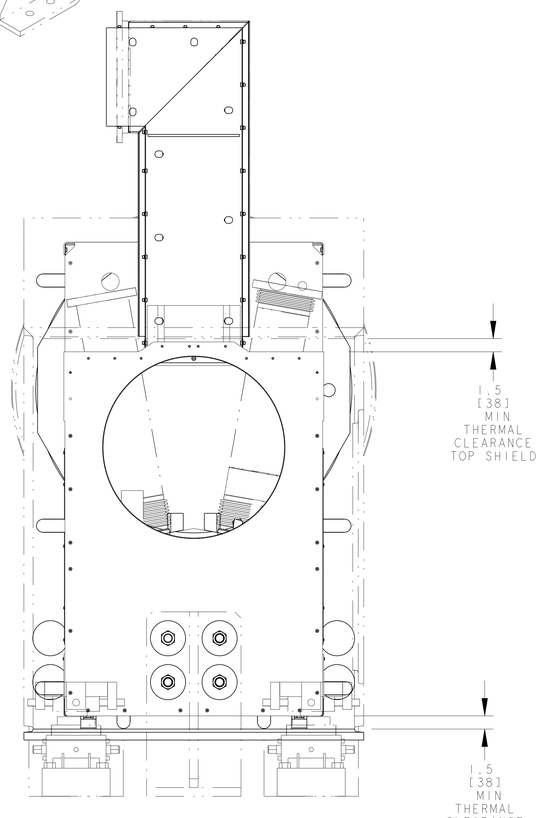

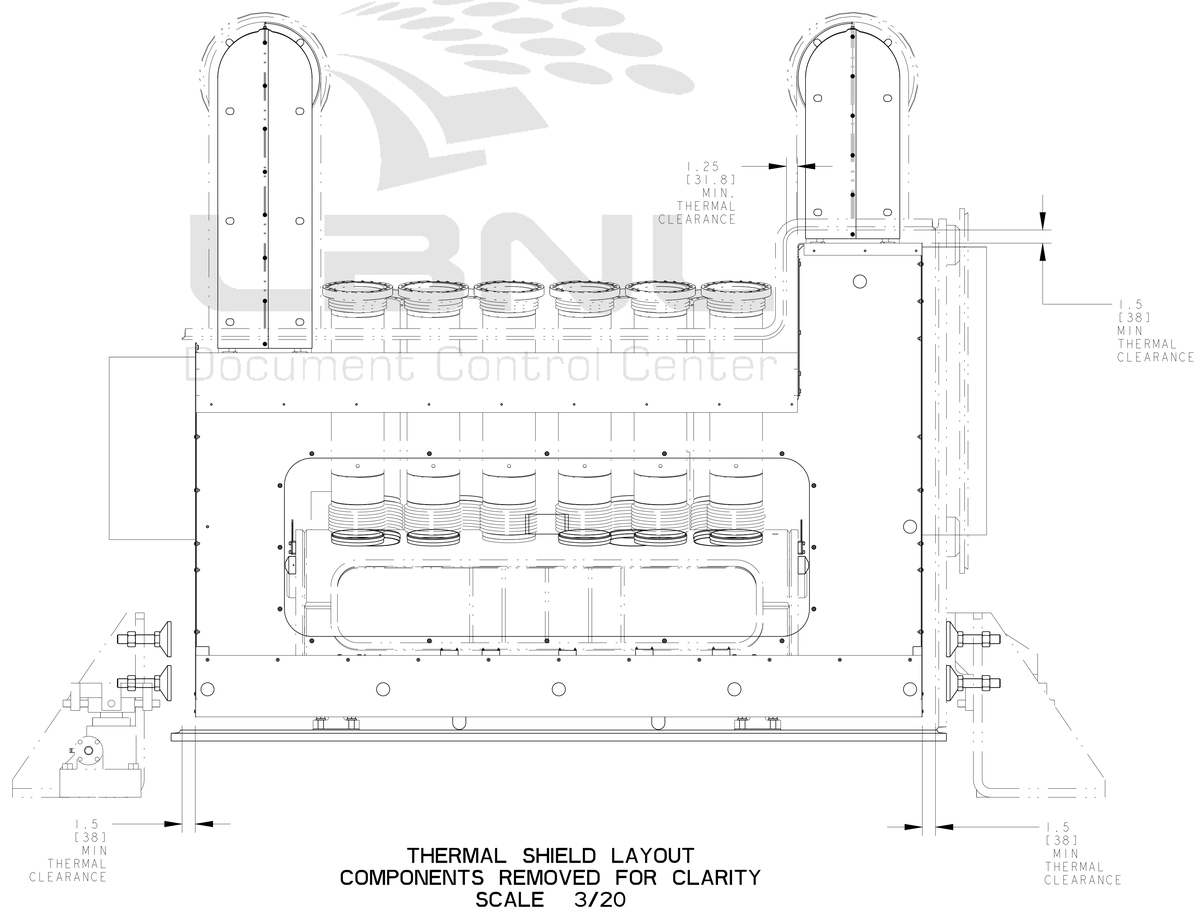

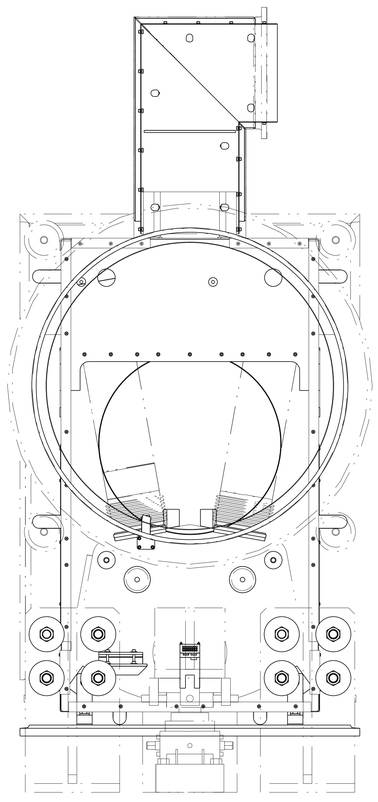

THERMAL SHIELD LAYOUT
COMPONENTS REMOVED FOR CLARITY
SCALE 3/20

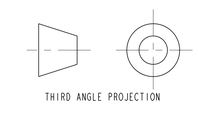

ERNEST ORLANDO LAWRENCE
BERKELEY NATIONAL LABORATORY
UNIVERSITY OF CALIFORNIA - BERKELEY

LHC IR FEEDBOX
MAJOR ASSEMBLY
DFBXC FEED BOX ASSY SKEL

MICROFILMED:	DWG. TYPE	SHOWN ON	SCALE: 3/50	DO NOT SCALE PRINTS
	PART	.	SHEET 9 OF 11	
PATENT CLEAR:	DESIGN ACCT. NO.	CATEGORY CODE	DWG. NO. 24C3526	SIZE REV. B
	Z5LCE2	LH2001		

DWG. NO. 24C3526 SIZE B REV. 9

Officially Released to the LBNL Document Control Center
Released: March 5th, 2003 DCC Auth Key: V1B6I5U8DU
Downloaded by: Daniel Pulsifer at April 09, 2007 10:57:27

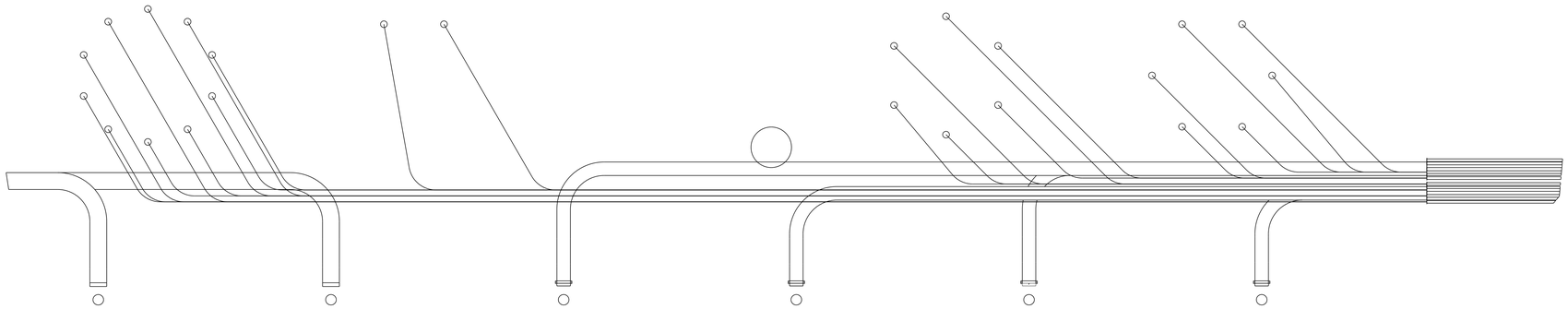

BUS CONDUCTOR RUNS

DETAIL N
SCALE 1/2

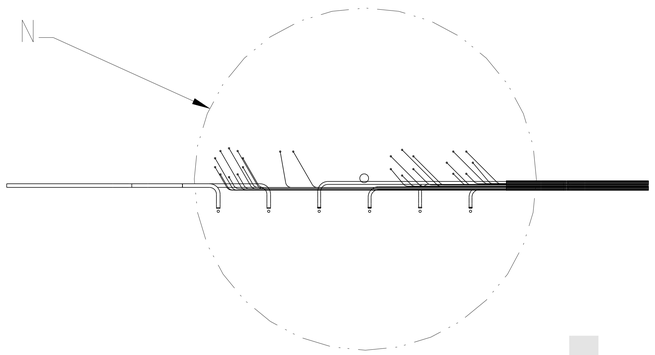

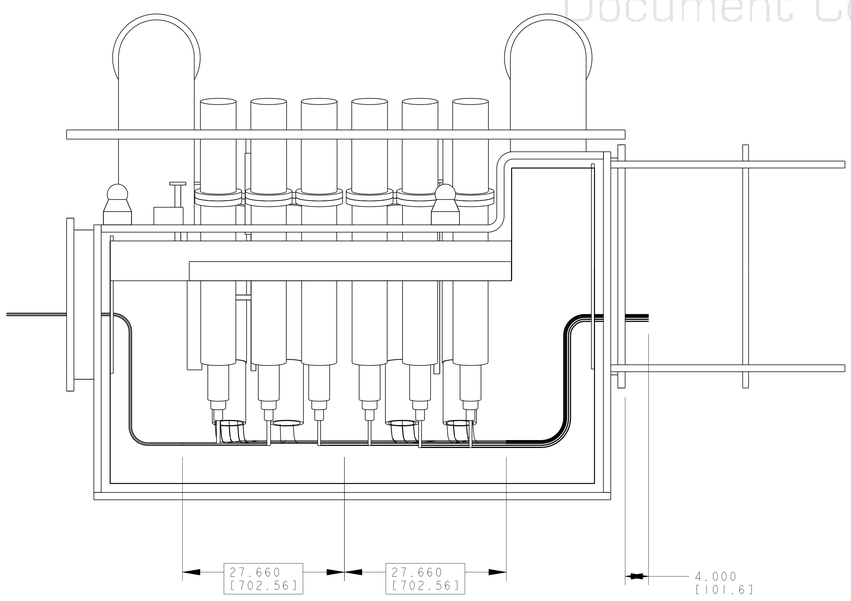

SCALE 1/10

THIRD ANGLE PROJECTION

ERNEST ORLANDO LAWRENCE
BERKELEY NATIONAL LABORATORY
UNIVERSITY OF CALIFORNIA - BERKELEY

LHC IR FEEDBOX
MAJOR ASSEMBLY
DFBXC FEED BOX ASSY SKEL

MICROFILMED:	DWG. TYPE	SHOWN ON	SCALE: 3/50	DO NOT SCALE PRINTS
	PART	.	SHEET 10 OF 11	
PATENT CLEAR:	DESIGN ACCT. NO.	CATEGORY CODE	DWG. NO.	SIZE / REV.
	Z5LCE2	LH2001	24C3526	B

DWG. NO. 24C3526 SIZE B REV. 10

LBNL Document Control Center

Officially Released to the LBNL Document Control Center
Released: March 5th, 2003 DCC Auth Key: V1B6ISU8DU

Downloaded by: Daniel Pulsifer at April 09, 2007 10:57:27

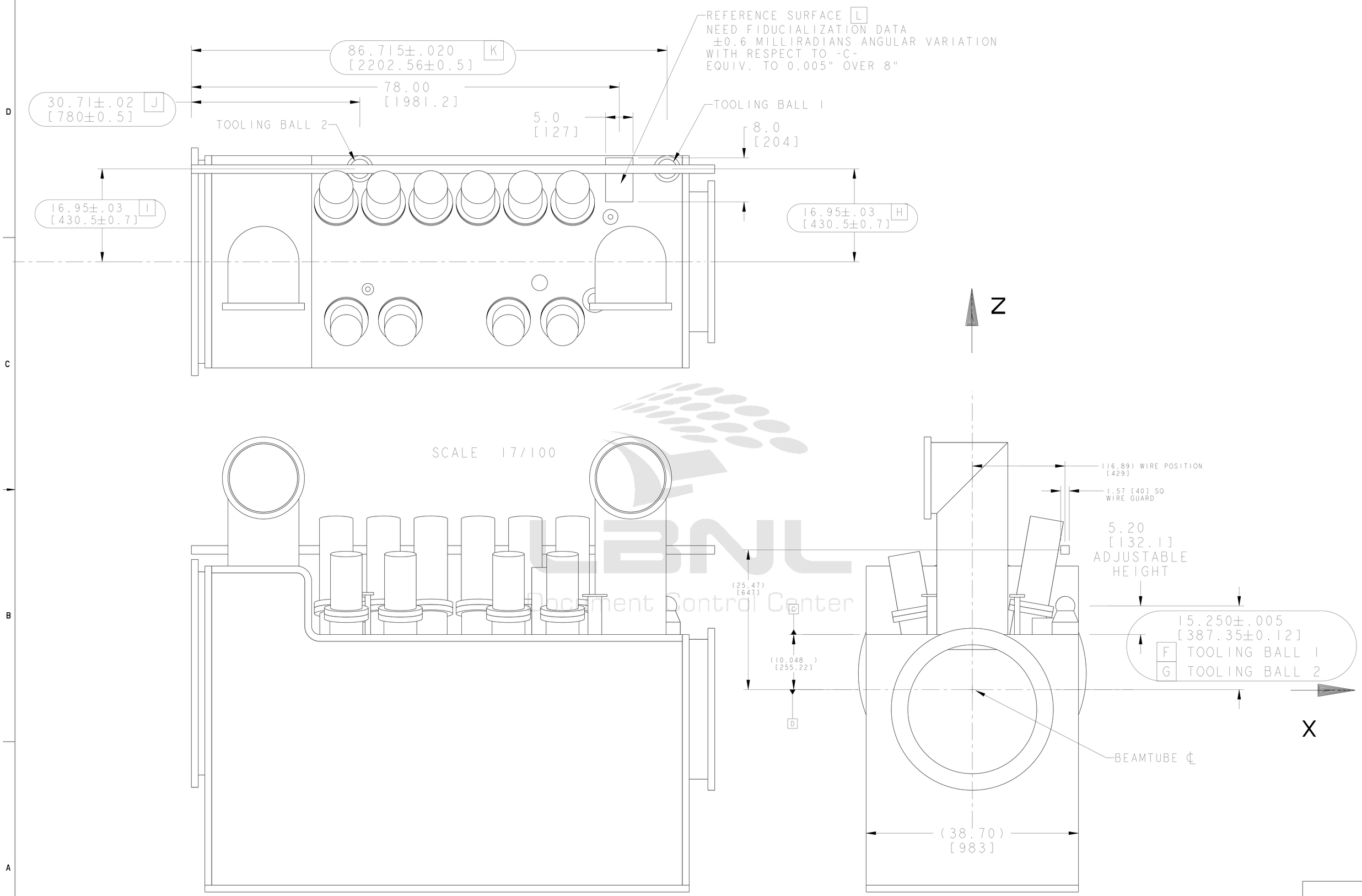

FIDUCIAL LAYOUT INFORMATION

THIRD ANGLE PROJECTION

ERNEST ORLANDO LAWRENCE
BERKELEY NATIONAL LABORATORY
UNIVERSITY OF CALIFORNIA - BERKELEY

LHC IR FEEDBOX
MAJOR ASSEMBLY
DFBXC FEED BOX ASSY SKEL

MICROFILMED:	DWG. TYPE	SHOWN ON	SCALE: 3/50	DO NOT SCALE PRINTS
	PART	.	SHEET 11 OF 11	
PATENT CLEAR:	DESIGN ACCT. NO.	CATEGORY CODE	DWG. NO.	SIZE / REV.
	Z5LCE2	LH2001	24C3526	B

DWG. NO. 24C3526 SIZE B REV. 11

Officially Released to the LBNL Document Control Center
Released: March 5th, 2003 DCC Auth Key: V1B6I5U8DU
Downloaded by: Daniel Pulsifer at April 09, 2007 10:57:27