NOTE:
1. DERIVED FROM SPECIFICATION LHC-DFBX-ES-100
2. DERIVED FROM SPECIFICATION LHC-DFBX-ES-200
3. DERIVED FROM SPECIFICATION LHC-DFBX-ES-210
4. DERIVED FROM SPECIFICATION LHC-DFBX-ES-240
5. DERIVED FROM SPECIFICATION LHC-DFBX-ES-260
6. DERIVED FROM SPECIFICATION LHC-DFBX-ES-250
7. DERIVED FROM SPECIFICATION LHC-DFBX-ES-230
8. FILL MOUNTING HOLES WITH EPOXY
9. HTS CURRENT LEAD IN SPECIFICATION M923B

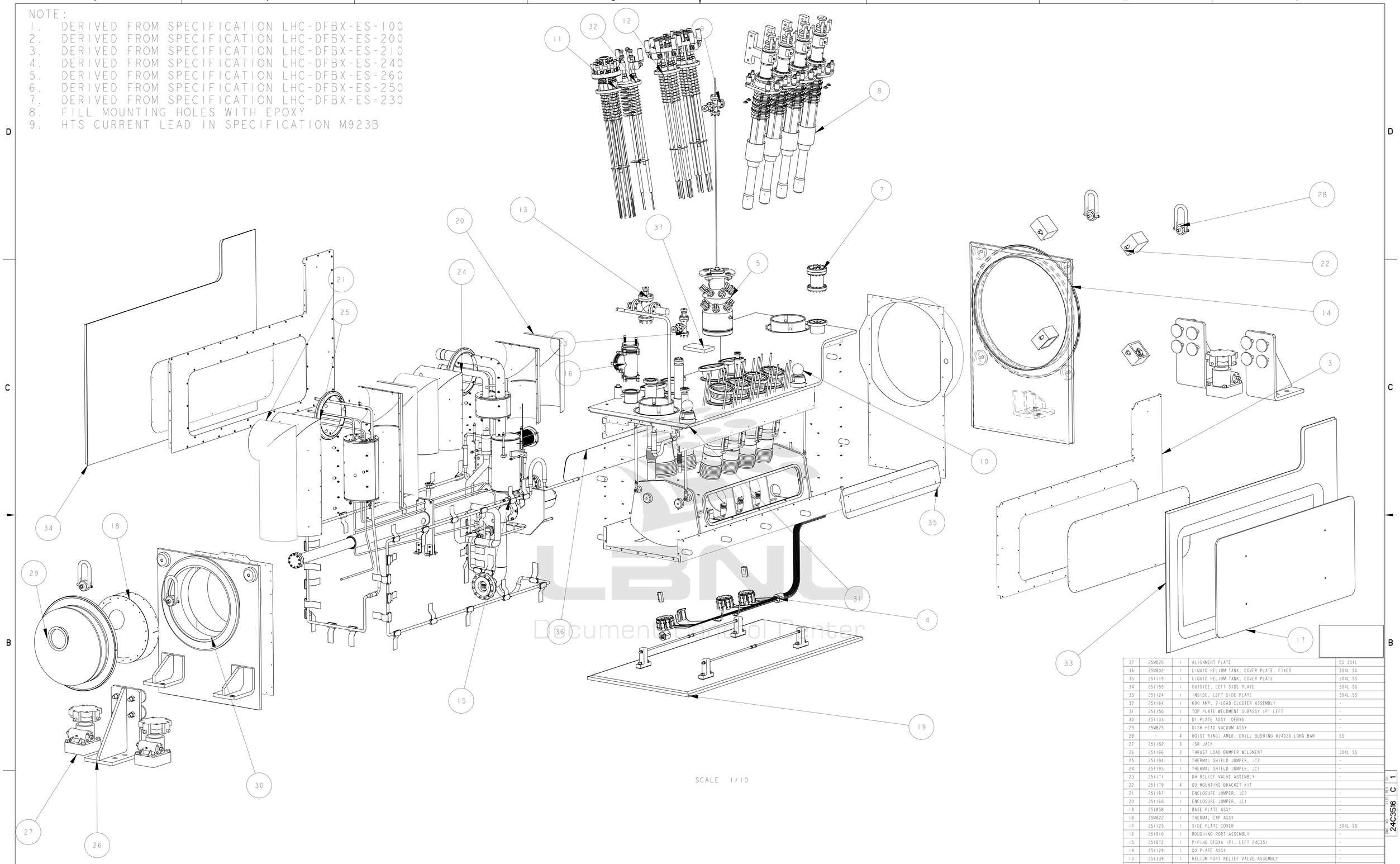

LBNL
Document Control Center

ITEM	PART NO.	REQD	DESCRIPTION	MATERIAL
37	25M820	1	ALIGNMENT PLATE	SS 304L
36	25M802	1	LIQUID HELIUM TANK, COVER PLATE, FIXED	304L SS
35	251119	1	LIQUID HELIUM TANK, COVER PLATE	304L SS
34	251159	1	OUTSIDE, LEFT SIDE PLATE	304L SS
33	251124	1	INSIDE, LEFT SIDE PLATE	304L SS
32	251164	1	600 AMP, 2-LEAD CLUSTER ASSEMBLY	-
31	251150	1	TOP PLATE WELDMENT SUBASSY IP1 LEFT	-
30	251133	1	DI PLATE ASSY DFBXG	-
29	25M825	1	DISH HEAD VACUUM ASSY	-
28	-	4	HOIST RING; AMER. DRILL BUSHING #24020 LONG BAR	SS
27	251182	3	ISR JACK	-
26	251166	3	THRUST LOAD BUMPER WELDMENT	304L SS
25	251194	1	THERMAL SHIELD JUMPER, JC2	-
24	251193	1	THERMAL SHIELD JUMPER, JC1	-
23	251171	1	DH RELIEF VALVE ASSEMBLY	-
22	251179	4	Q3 MOUNTING BRACKET KIT	
21	251167	1	ENCLOSURE JUMPER, JC2	-
20	251168	1	ENCLOSURE JUMPER, JC1	-
19	251858	1	BASE PLATE ASSY	-
18	25M822	1	THERMAL CAP ASSY	-
17	251125	1	SIDE PLATE COVER	304L SS
16	251910	1	ROUGHING PORT ASSEMBLY	-
15	251872	1	PIPING DFBXA IP1, LEFT 24C351	-
14	251129	1	Q3 PLATE ASSY	-
13	251339	1	HELIUM PORT RELIEF VALVE ASSEMBLY	-
12	24C353	2	600 AMP,6 LEAD VAPOR COOLED ASSY	-
11	24C322	1	120 AMP VC LEAD MOUNTING ASSY	-
10	251868	2	TOOLING BALL, LHCGIMSA00092	-
9	251162	1	LHE DIAGNOSTIC ASSY	-
8	251156	6	PIRELLI HTS LEAD KIT	-
7	251851	1	HELIUM GUARD ASSEMBLY	-
5	251831	1	LQX DIAGONSTIC ASSEMBLY	-
4	251864	1	BUS DUCT ASSEMBLY	-
3	251079	1	THERMAL SHIELD ASSY, DFBXG	-

DWG. NO. 24C3516 SHT. 1 OF 1 REV. C

11. SOLDER JOINT USING SN60PB40 SOLDER; ROSIN FLUX, USE SPLICE PLATE IF REQUIRED
12. CLOSEOUT WELD PROCEDURE TO BE APPROVED BY LBNL
    DISTORTION CONTROL IS ESSENTIAL, ROOT PASS GTAW, COVER PASSES GMAW, SMAW, FCMAW.
13. WELD PROCEDURE TO BE APPROVED BY LBNL, USE GTAW PROCESS
14. BELLOWS TO BE WITHIN 0.03" OF FREE CONFIGURATION AFTER CLOSEOUT WELDING
15. DIMENSIONS FROM DFBX FLANGE FACE ON DI SIDE, ADD -2367.2 MM TO OBTAIN POSITION
    RELEATIVE TO DFBX COORDINATE SYSTEM
16. SHIM TANK SUPPORTS TO LIMIT STATIC DEFLECTION OF THE LOWER TANK SUPPORT RODS
    TO LESS THAN 0.25"
17. DIMENSIONS SHOW IN INSPECTION OVAL ARE REFERENCED IN THE FABRICATION TRAVELER
18. COPPER STRAP ATTACHED TO THE THERMAL ANCHORS DO NOT HAVE TO BE EVENLY SPACED.
19. ALL DIMENSIONS GIVEN AT ROOM TEMPERATURE

THIRD ANGLE PROJECTION

REV	DWG	CHK	ZONE	DATE	CHANGES
C	JDR	DPO		03/03/03	CHANGED PIPE END LOCATIONS. CHANGED WELD ON SIDE PLATE COVER ADDED DISH HEAD VACUUM ASSY
B	JDR	DPO		12/10/02	INITIAL RELEASE
A	JDR	DPO		10/03/02	PRELIMINARY RELEASE

UNLESS OTHERWISE SPECIFIED
TOLERANCES:
X.X ± 0.1 FRAC. ± 1/64
X.XX ± 0.03 Angles ± 1.00°
X.XXX ± 0.010 FINISH 125 μ-inch
DO NOT SCALE PRINT
THREADS ARE CLASS 2
CHAMFER ENDS OF ALL SCREW THREADS 30°
CUT ROUND, 1.5 THREAD RELIEF ON MACHINED THREADS
BREAK EDGES .016 MAX. ON MACHINED WORK
REMOVE BURRS, WELD SPLATTER & LOOSE SCALE
IN ACCORDANCE WITH ASME Y14.5M & B46.1

SHOP ORDERS
ACCT NO. | NL REQD | ISA NO. | DATE | ISSD | DATE | REQD
DEL TO | SURFACE TREATMT | JOINT METHOD | PROJECT NUMBER | MTR (Origin)
PROJECT NAME N/A
DWG BY M J KNOLLS DATE 02-Nov-01
CHK BY Jon Zbasnik DATE 03-OCT-02
APR BY Jon Zbasnik DATE 03-OCT-02

ERNEST ORLANDO LAWRENCE BERKELEY NATIONAL LABORATORY
UNIVERSITY OF CALIFORNIA - BERKELEY

LHC IR FEEDBOX
MAJOR ASSEMBLY
DFBXA (IP1, LEFT) FEED BOX ASSY

MICROFILMED: | DWG. TYPE: ASSEM | SHOWN ON: - | SCALE: 1:3/100 | DO NOT SCALE PRINTS
PATENT CLEAR: | DESIGN ACCT. NO.: Z5LCE2 | CATEGORY CODE: LH2001 | DWG. NO.: 24C3516 | SIZE: C | REV.: C
SHEET 1 OF 11

Officially Released to the LBNL Document Control Center
Released: March 5th, 2003 DCC Auth Key: RY7MY4I3TQ
Downloaded by: Daniel Pulsifer at April 09, 2007 10:57:26

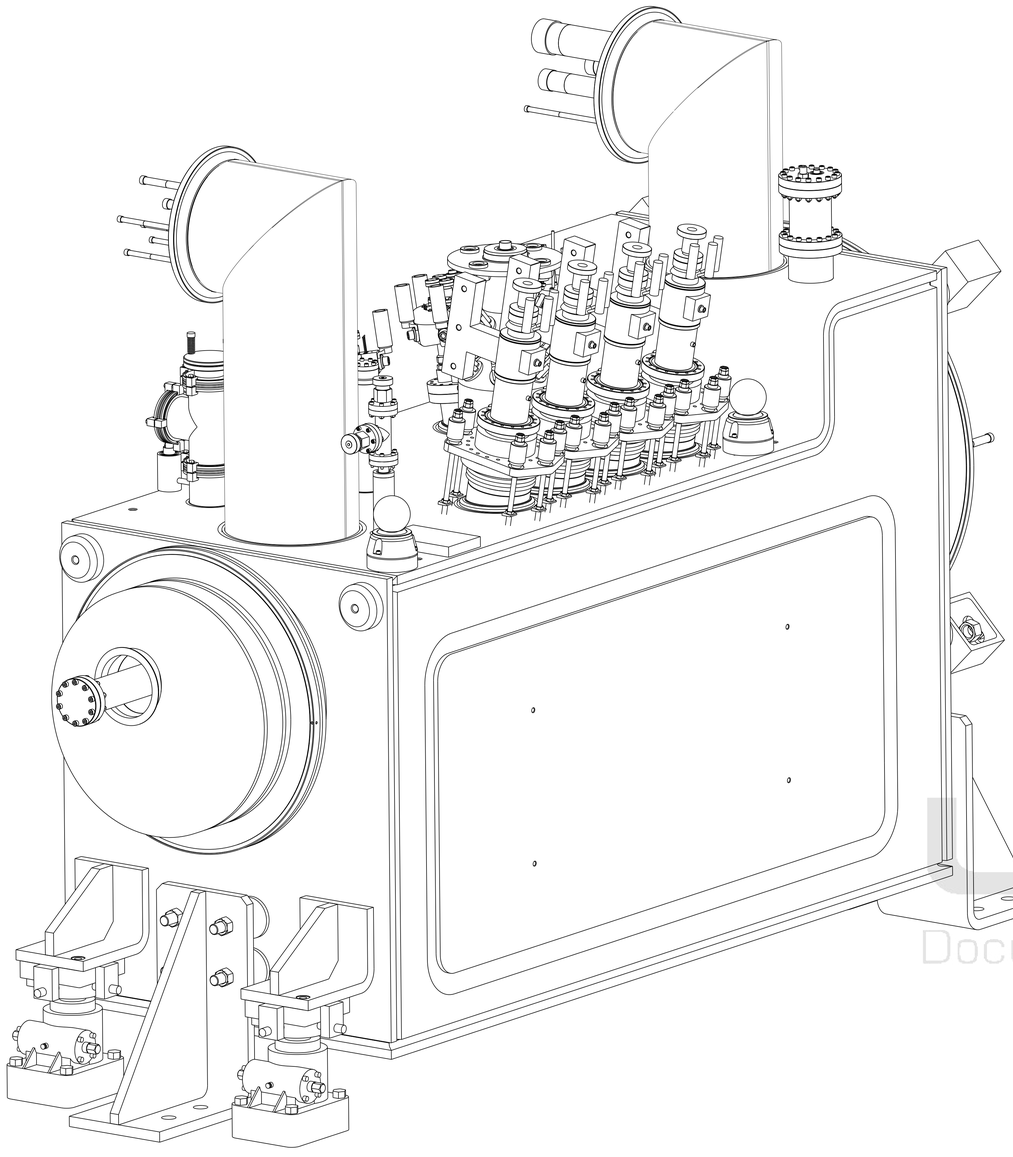

D1 END

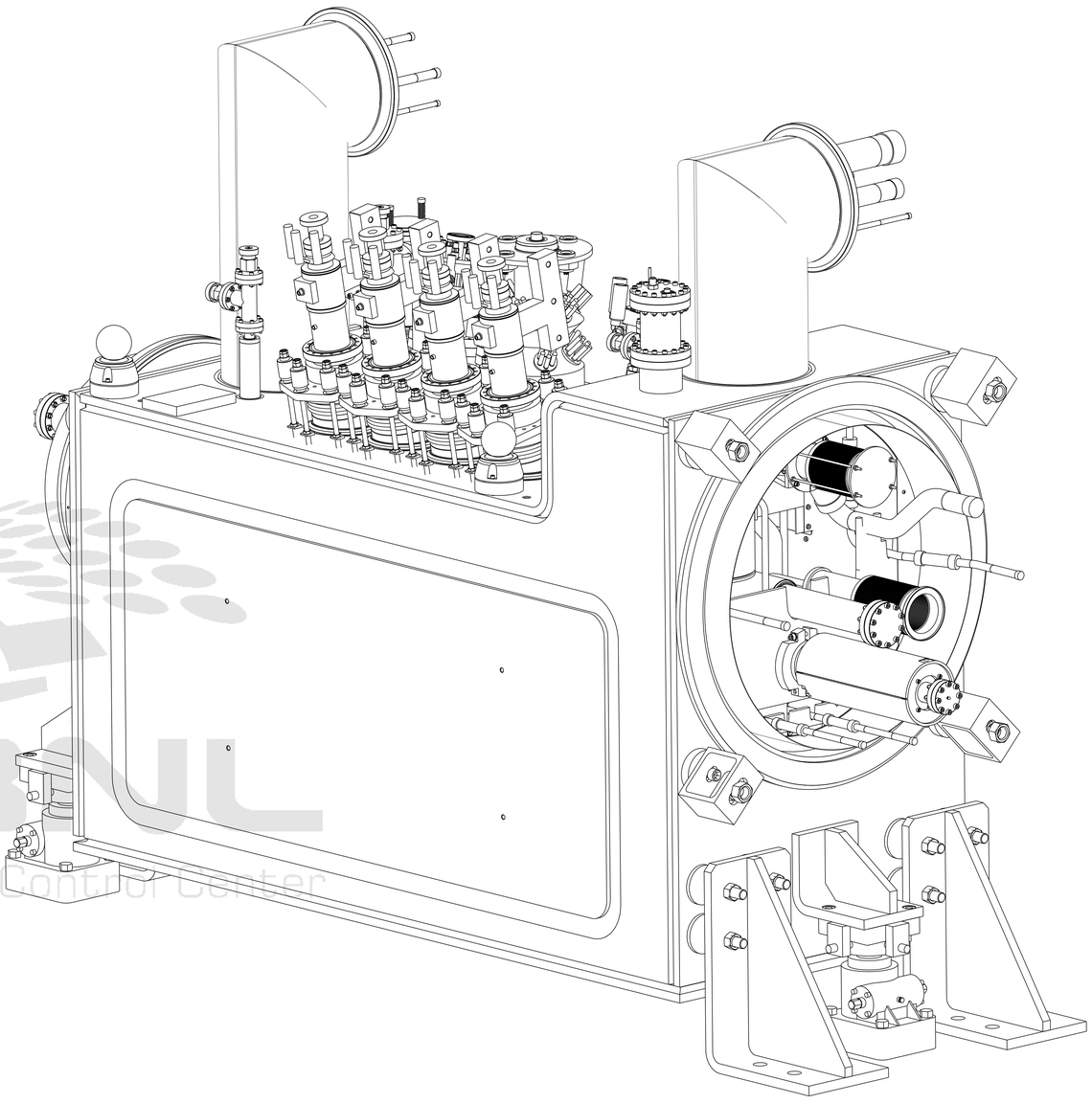

Q3 END

DFBXA, IP1 (LEFT)

LBNL
Document Control Center

THIRD ANGLE PROJECTION

ERNEST ORLANDO LAWRENCE
BERKELEY NATIONAL LABORATORY
UNIVERSITY OF CALIFORNIA - BERKELEY

LHC IR FEEDBOX
MAJOR ASSEMBLY
DFBXA (IP1, LEFT) FEED BOX ASSY

MICROFILMED:	DWG. TYPE	SHOWN ON	SCALE: 9/50	DO NOT SCALE PRINTS
	ASSEM	-	SHEET 2 OF 11	
PATENT CLEAR:	DESIGN ACCT. NO.	CATEGORY CODE	DWG. NO.	SIZE / REV.
	Z5LCE2	LH2001	24C3516	C

DWG. NO. 24C3516 SIZE C REV 2

Officially Released to the LBNL Document Control Center
Released: March 5th, 2003 DCC Auth Key: RY7MY4I3TQ
Downloaded by: Daniel Pulsifer at April 09, 2007 10:57:26

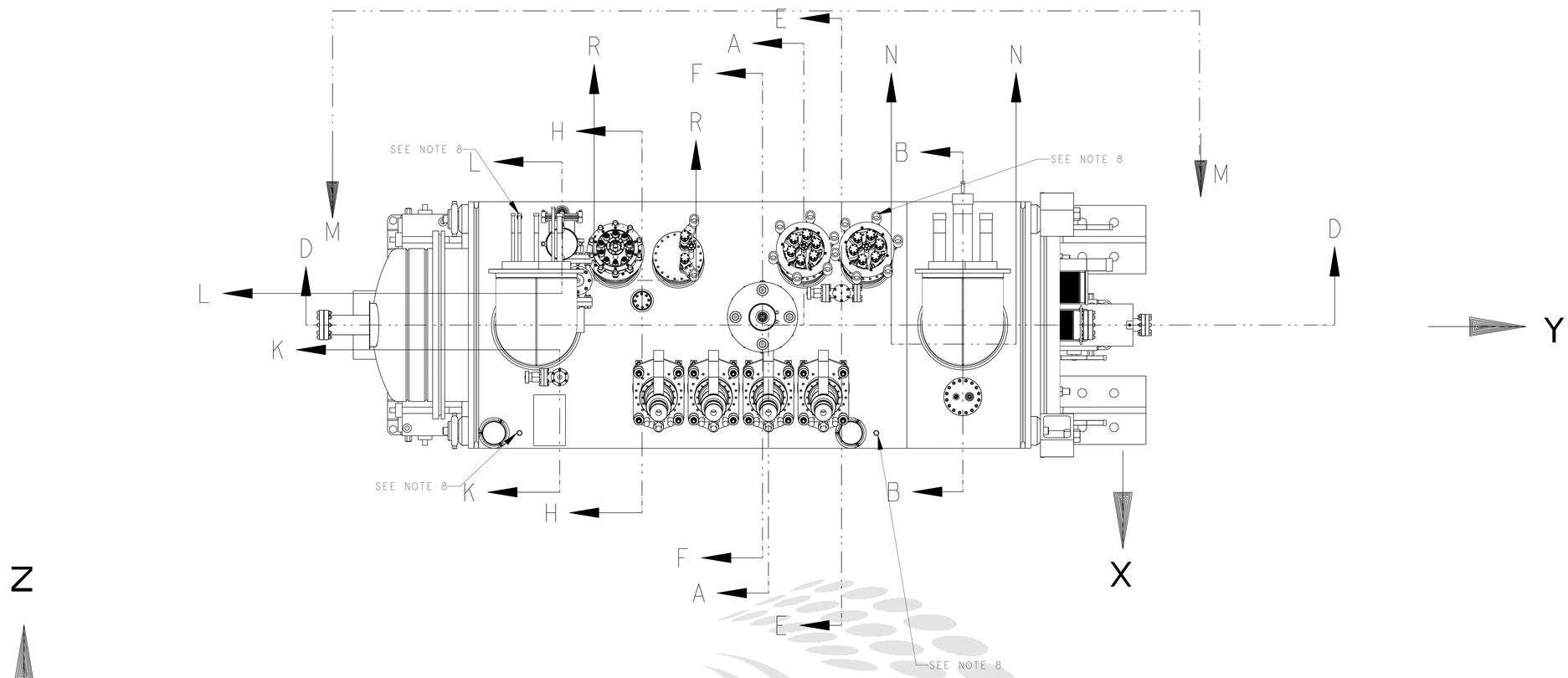

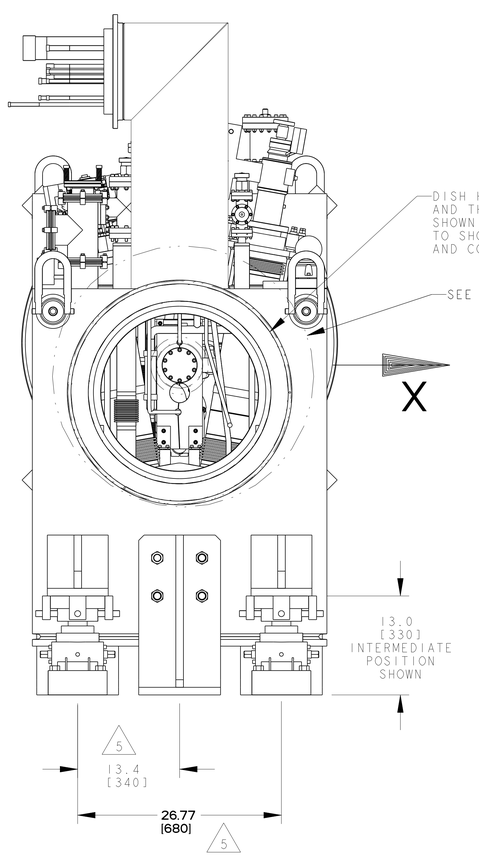

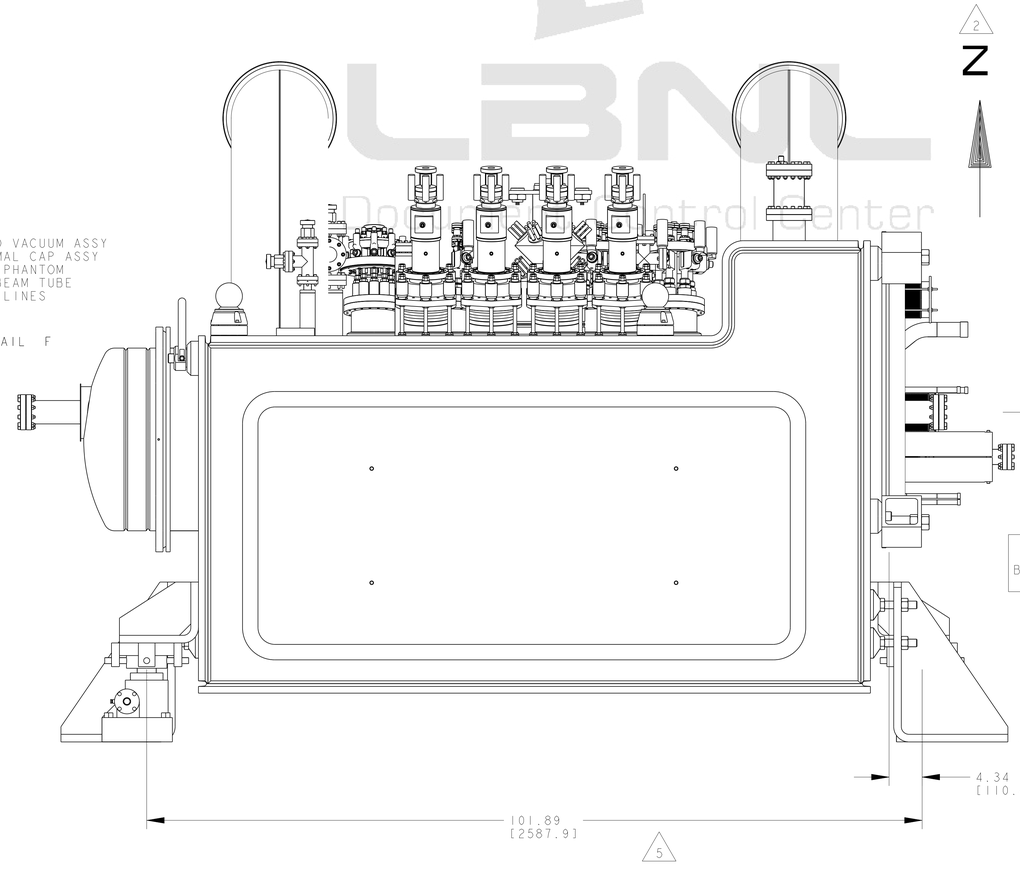

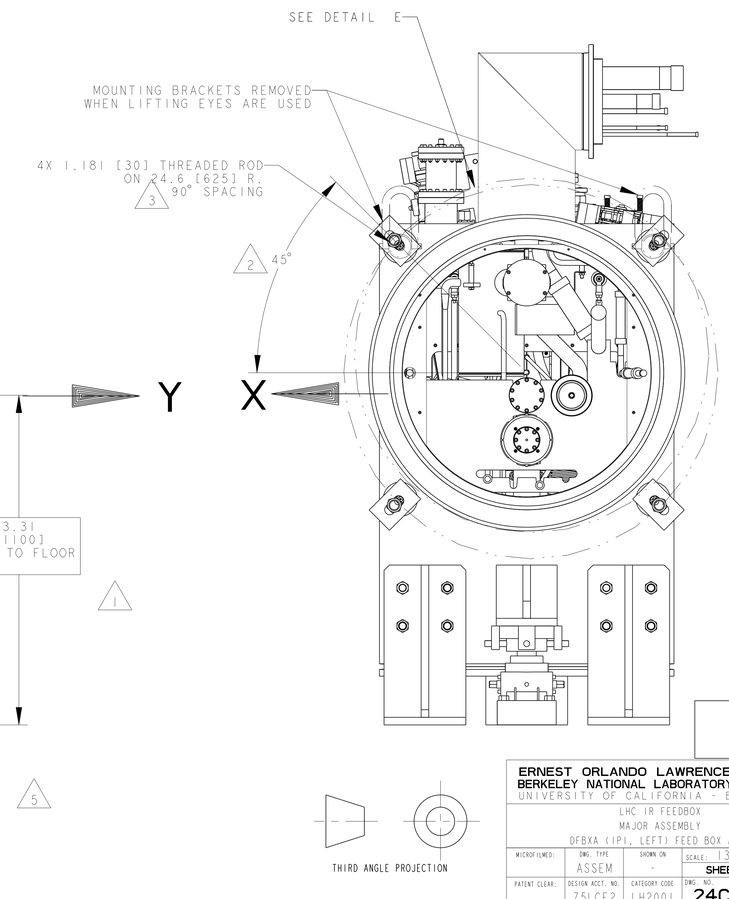

THIRD ANGLE PROJECTION

ERNEST ORLANDO LAWRENCE
BERKELEY NATIONAL LABORATORY
UNIVERSITY OF CALIFORNIA - BERKELEY

LHC IR FEEDBOX
MAJOR ASSEMBLY
DFBXA (IP1, LEFT) FEED BOX ASSY

MICROFILMED:	DWG. TYPE	SHOWN ON	SCALE: 1:3/100	DO NOT SCALE PRINTS
	ASSEM	-	SHEET 3 OF 11	
PATENT CLEAR:	DESIGN ACCT. NO.	CATEGORY CODE	DWG. NO.	SIZE / REV.
	Z5LCE2	LH2001	24C3516	C

DWG. NO. 24C3516 SHEET NO. 3 REV. C

Officially Released to the LBNL Document Control Center
Released: March 5th, 2003 DCC Auth Key: RY7MY4I3TQ
Downloaded by: Daniel Pulsifer at April 09, 2007 10:57:26

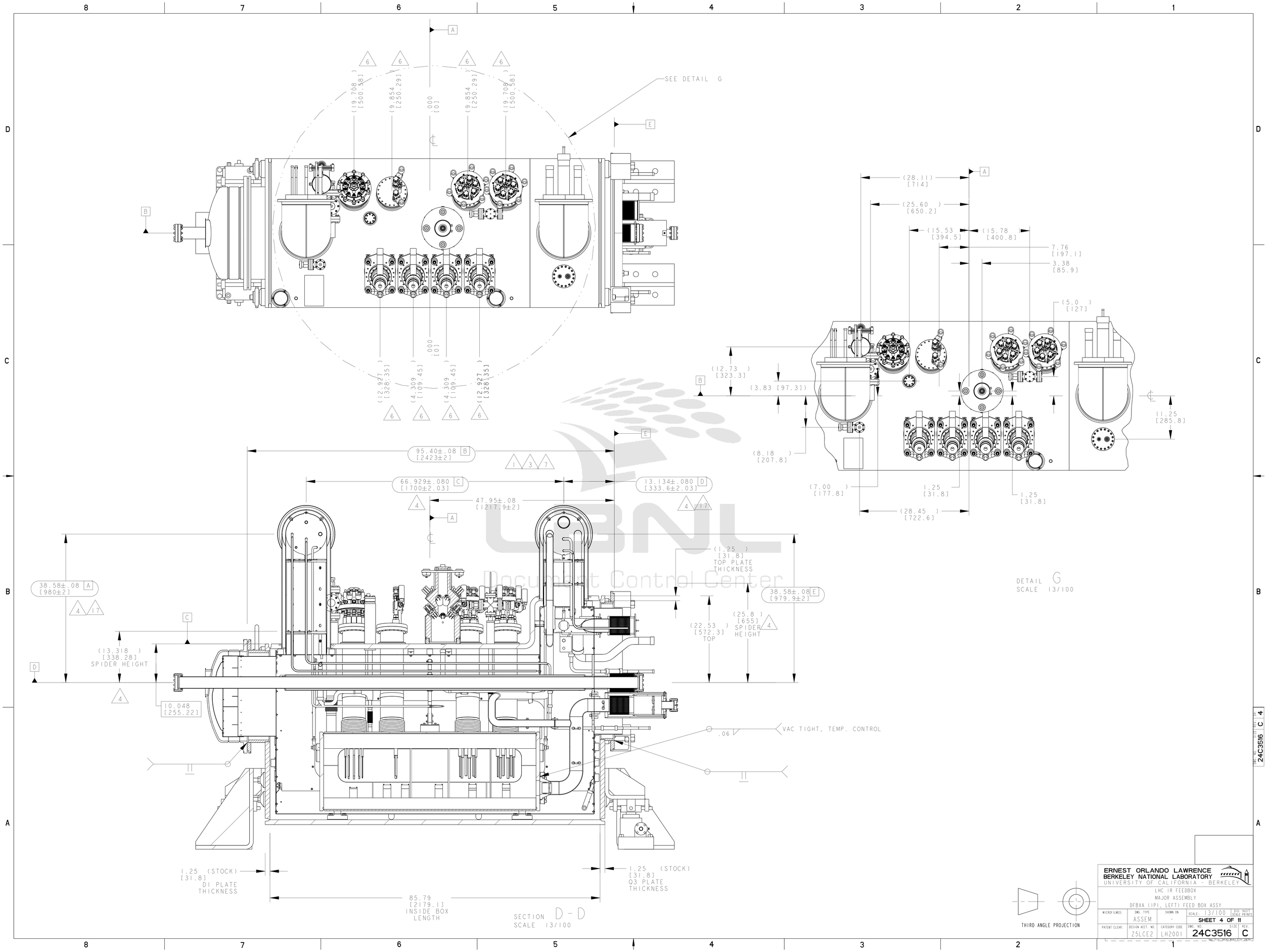

Officially Released to the LBNL Document Control Center
Released: March 5th, 2003 DCC Auth Key: RY7MY4I3TQ
Downloaded by: Daniel Pulsifer at April 09, 2007 10:57:26

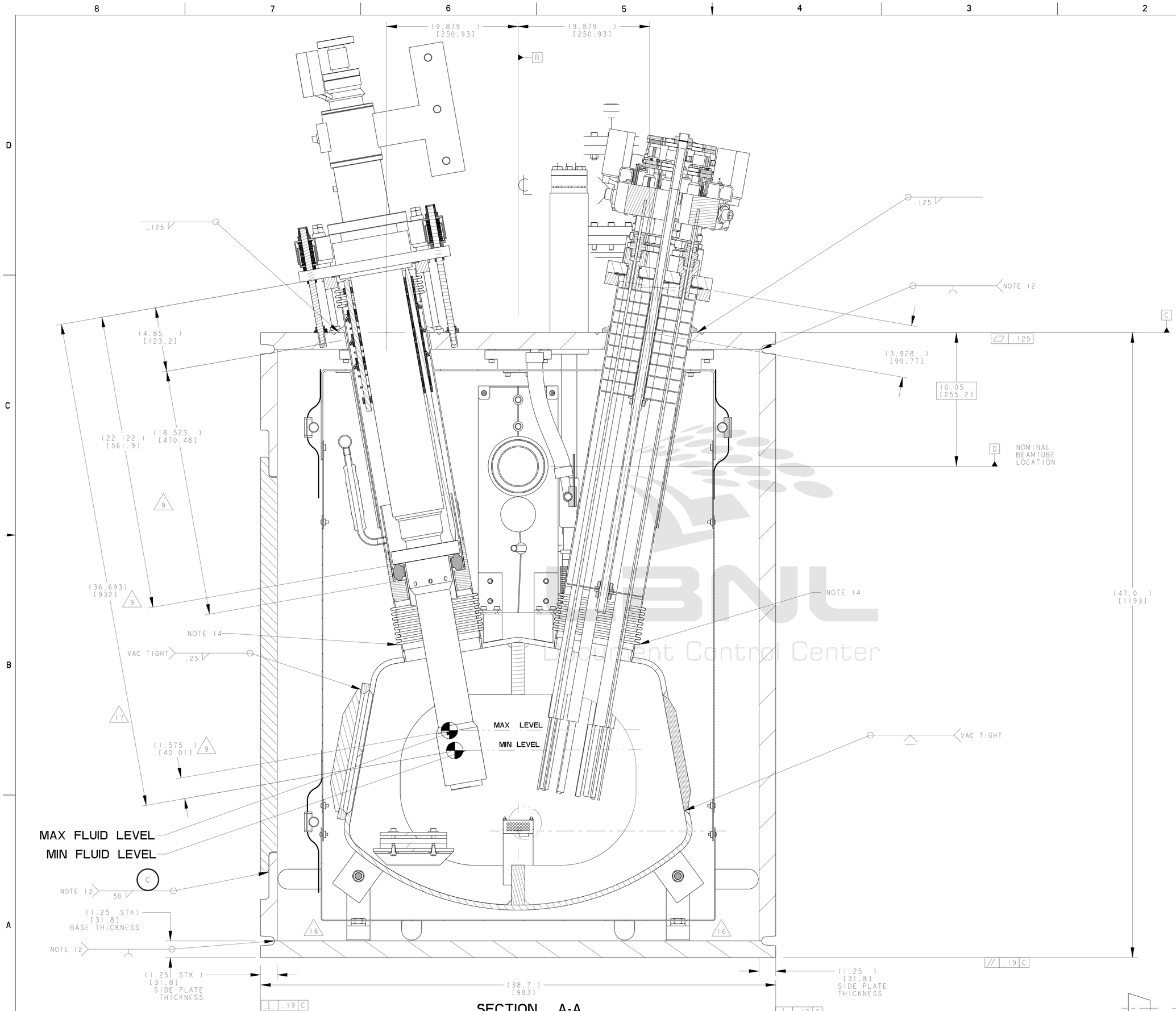

SECTION A-A
HTS AND VAPOR COOLED LEAD LAYOUT
SCALE 2/5

ERNEST ORLANDO LAWRENCE BERKELEY NATIONAL LABORATORY
UNIVERSITY OF CALIFORNIA . BERKELEY

LHC IR FEEDBOX
MAJOR ASSEMBLY
DFBXA (IP1, LEFT) FEED BOX ASSY

MICROFILMED:	DWG. TYPE	SHOWN ON	SCALE: 1:3/100	DO NOT SCALE PRINTS
	ASSEM	-	SHEET 5 OF 11	
PATENT CLEAR:	DESIGN ACCT. NO.	CATEGORY CODE	DWG. NO.	SIZE / REV.
	Z5LCE2	LH2001	24C3516	C

DWG. NO. 24C3516 SHEET 5 REV. C

LBNL Document Control Center

Officially Released to the LBNL Document Control Center
Released: March 5th, 2003 DCC Auth Key: RY7MY4I3TQ
Downloaded by: Daniel Pulsifer at April 09, 2007 10:57:26

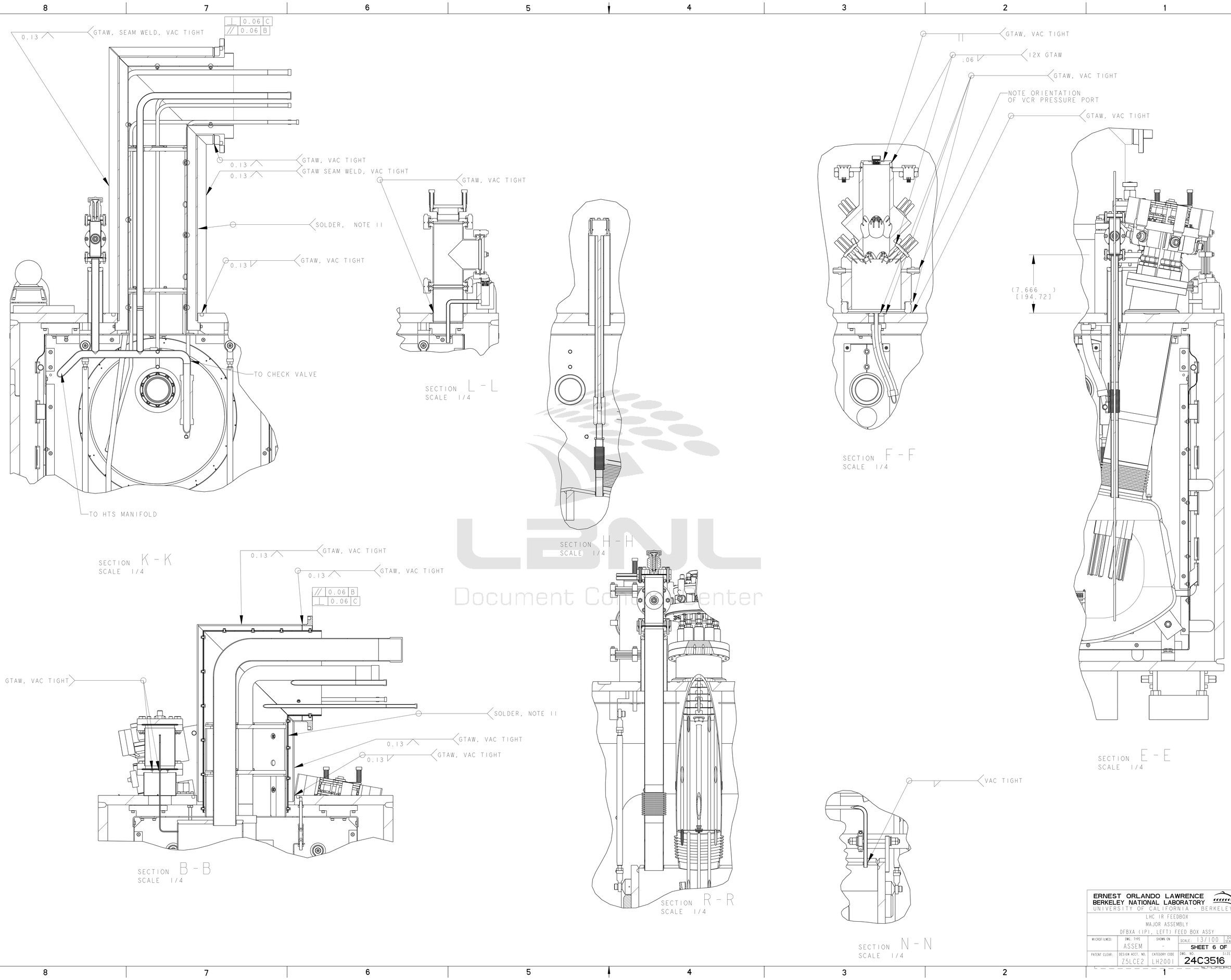

Officially Released to the LBNL Document Control Center
Released: March 5th, 2003 DCC Auth Key: RY7MY4I3TQ
Downloaded by: Daniel Pulsifer at April 09, 2007 10:57:26

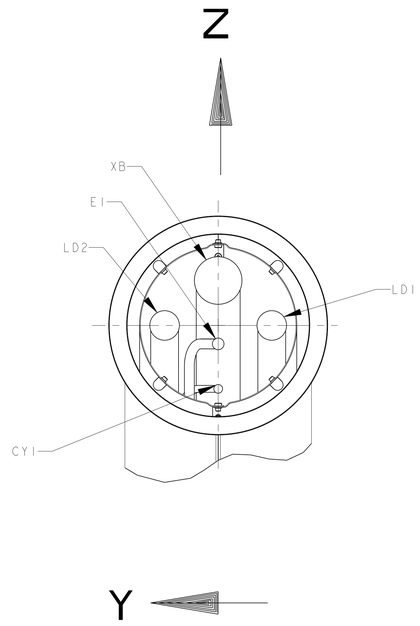

		DIM'S MEASURED FROM FLANGE CENTER	
PIPE	X	Y ±0.08	Z ±0.08
XB	-14.45±.08 [367±2]	0	3.07 [78]
LD2	-14.45±.08 [367±2]	3.66 [93]	0
LD1	-14.45±.08 [367±2]	-3.66 [93]	0
E1	-14.45±.08 [367±2]	0	-1.26 [32]
CY1	-14.45±.08 [367±2]	0	-4.33 [110]

4

DETAIL C
JC1 / QQSC
DIMENSIONAL TOLERANCE ± 0.08
ORIENTATION OPPOSITE OF SPECIFICATION 240
SCALE 1/4

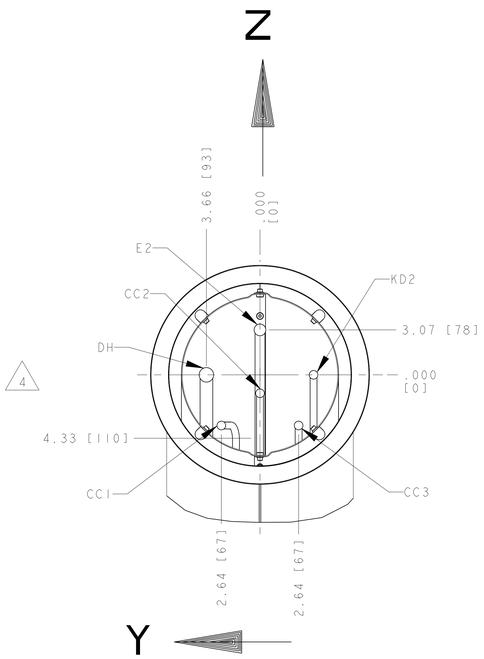

		DIM'S MEASURED FROM FLANGE CENTER	
PIPE	X	Y ±0.08	Z ±0.08
E2	-14.45±.08 [367±2]	0	3.07 [78]
DH	-14.45±.08 [367±2]	3.66 [93]	0
KD2	-11.85±.08 [301±2]	-3.66 [93])	0
CC2	-14.45±.08 [367±2]	0	-1.26 [32]
CC1	-14.45±.08 [367±2]	2.64 [67]	-3.46 [88]
CC3	-14.45±.08 [367±2]	-2.64 [67]	-3.46 [88]

4

DETAIL D
JC2 / QQSD
DIMENSIONAL TOLERANCE ± 0.08
ORIENTATION OPPOSITE OF SPECIFICATION 240
SCALE 1/4

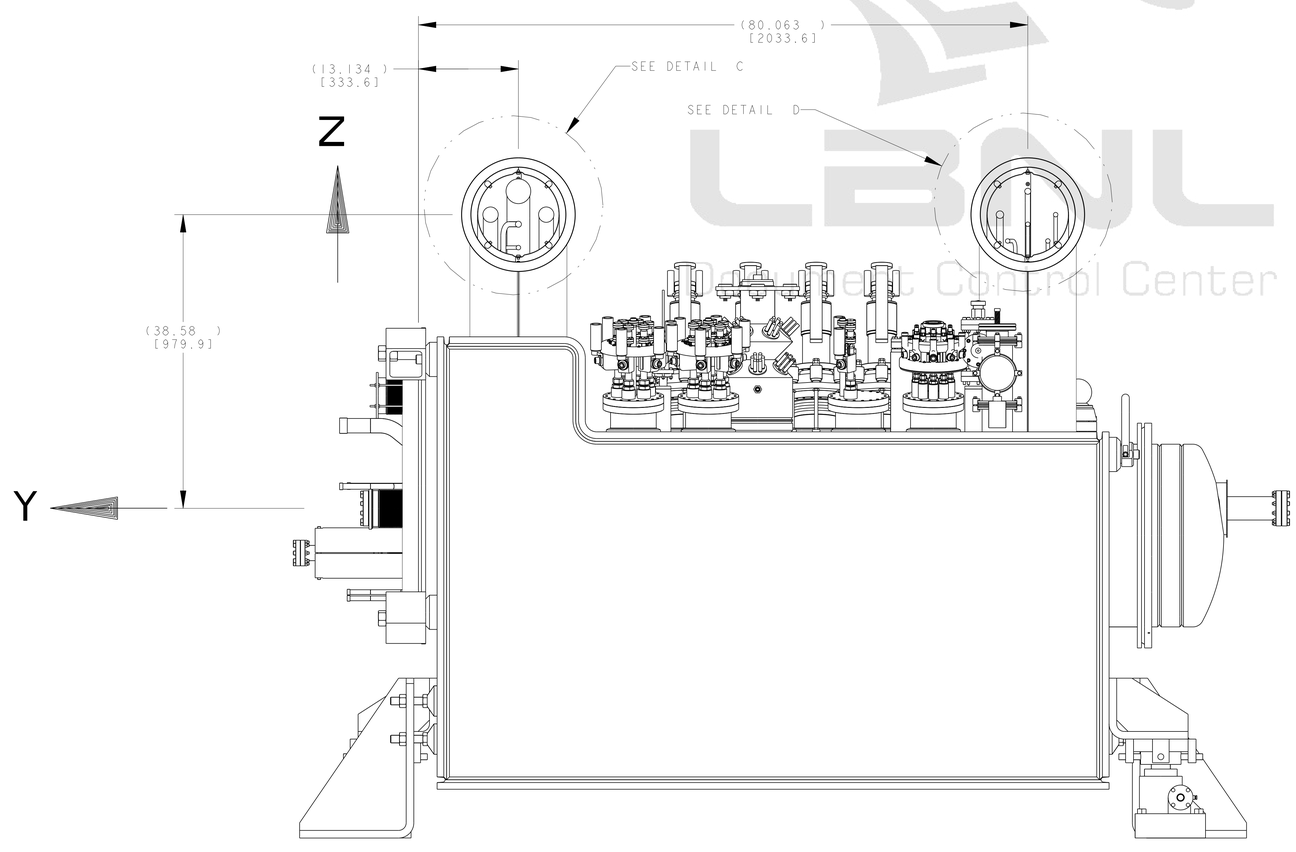

VIEW M - M
ROTATED 180°

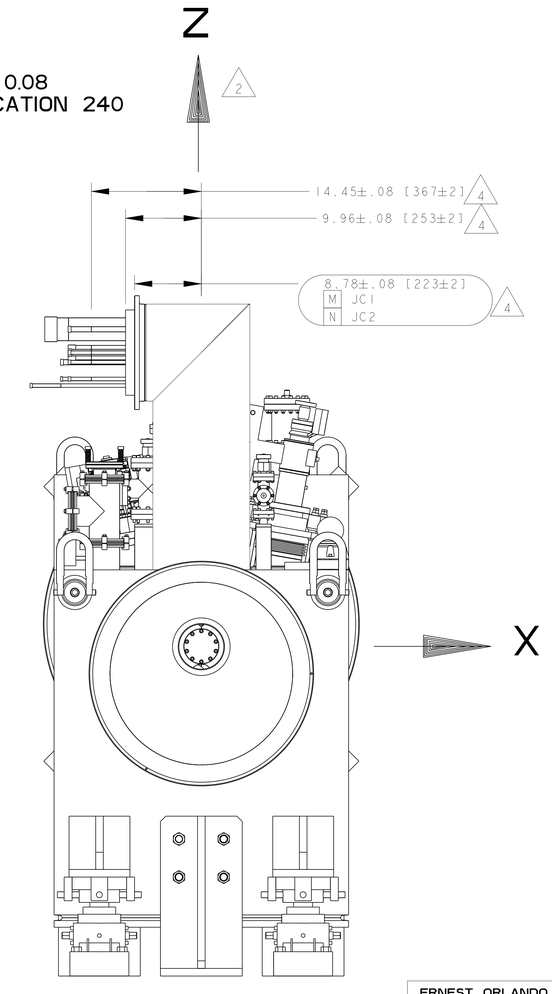

THIRD ANGLE PROJECTION

ERNEST ORLANDO LAWRENCE BERKELEY NATIONAL LABORATORY
UNIVERSITY OF CALIFORNIA · BERKELEY

LHC IR FEEDBOX
MAJOR ASSEMBLY
DFBXA (IP1, LEFT) FEED BOX ASSY

MICROFILMED:	DWG. TYPE	SHOWN ON	SCALE: 13/100	DO NOT SCALE PRINTS
	ASSEM	-	SHEET 7 OF 11	
PATENT CLEAR:	DESIGN ACCT. NO.	CATEGORY CODE	DWG. NO.	SIZE / REV.
	Z5LCE2	LH2001	24C3516	C

DWG. NO. 24C3516 SIZE C SHT 7

Officially Released to the LBNL Document Control Center
Released: March 5th, 2003 DCC Auth Key: RY7MY4I3TQ
Downloaded by: Daniel Pulsifer at April 09, 2007 10:57:26

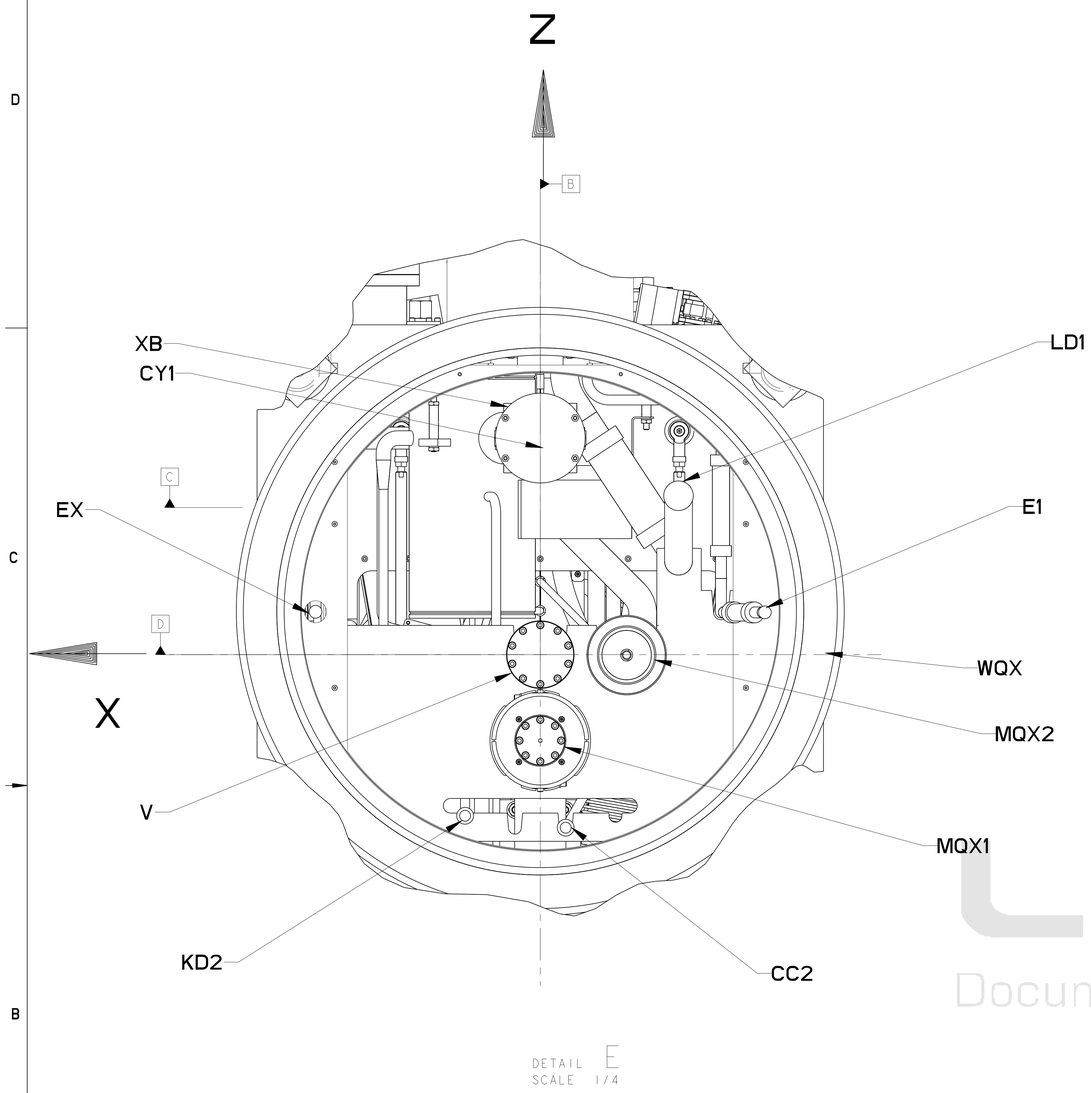

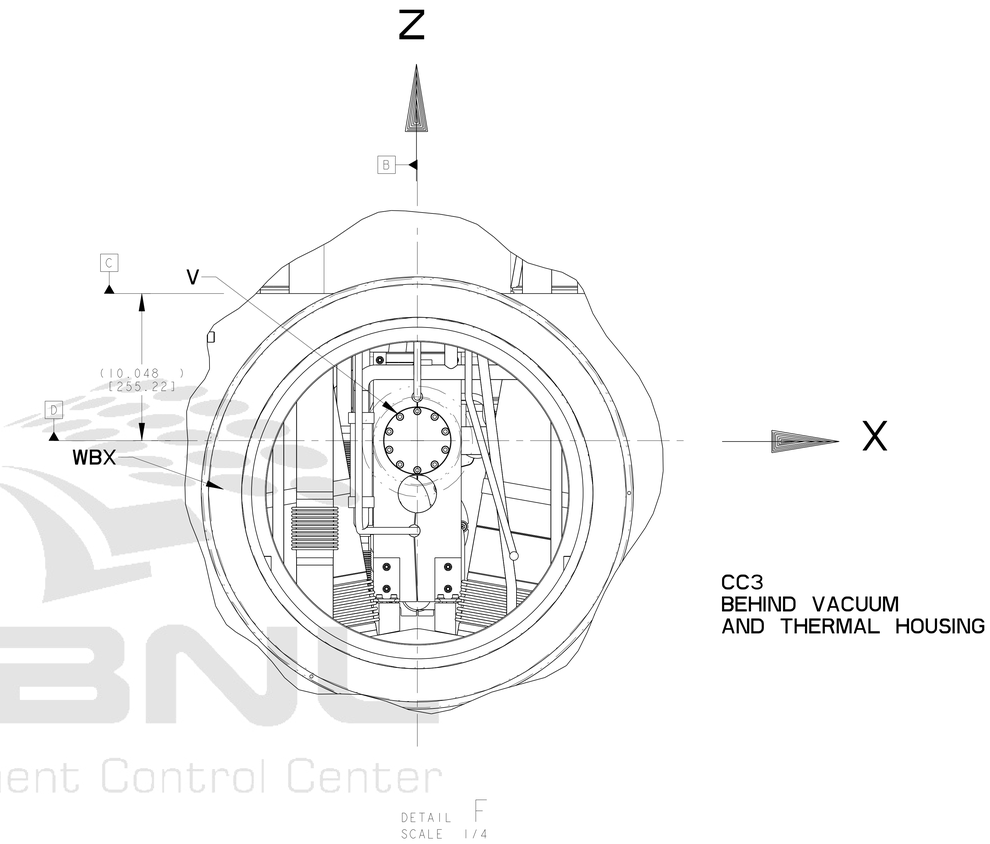

CC3
BEHIND VACUUM
AND THERMAL HOUSING

C

C

Q3 PIPING INTERFACE PER SPEC. LHC-DFBX-ES-210.00 REV 1.0					
DFBX	PIPE OD/ID		PIPE COORDINATES AT 300 K		
DFBX	OD in [mm]	ID in [mm]	X in [mm] ±.08	Z in [mm] ±.08	Y in [mm] ±.08
V	3.071 [78]	2.913 [73.99]	.000 [0]	.000 [0]	2.032 [51.61]
LD1	1.748 [44.4]	1.650 [41.91]	-9.444 [-239.88]	10.855 [275.72]	6.299 [159.99]
KD2	.626 [15.9]	.528 [13.41]	5.137 [130.48]	-11.822 [-300.28]	6.299 [159.99]
CC2	.626 [15.9]	.528 [13.41]	-1.735 [-44.07]	-11.822 [-300.28]	6.299 [159.99]
CY1	.626 [15.9]	.528 [13.41]	.000 [0]	14.126 [358.8]	3.617 [91.87]
E1	1.500 [38.1]	1.370 [34.8]	-15.345 [-389.76]	2.885 [73.28]	6.299 [159.99]
EX	1.500 [38.1]	1.370 [34.8]	15.355 [390.02]	2.929 [74.4]	6.299 [159.99]
MQX1	3.500 [88.9]	3.370 [85.6]	.000 [0]	-5.871 [-149.12]	6.299 [159.99]
MQX2	3.500 [88.9]	3.370 [85.6]	-5.902 [-149.91]	-.031 [-0.79]	6.299 [159.99]
WQX	41.535 [1055]	35.039 [890]	.000 [0]	2.953 [75.01]	.000 [0]
XB	3.500 [88.9]	3.370 [85.6]	.000 [0]	14.792 [375.72]	5.118 [130]

Q3 PIPING INTERFACE PER SPEC. LHC-DFBX-ES-210.00 REV 1.0					
	PIPE OD/ID		PIPE COORDINATES AT 300 K		
DFBX	OD in [mm]	ID in [mm]	X in [mm] ±.08	Z in [mm] ±.08	Y in [mm] ±.08
V	3.06 [77.7]	2.91 [73.9]	.000 [0]	.000 [0]	-13.504 [-343]
CC3	.63 [16]	.53 [13.5]	6.604 [167.74]	-7.879 [-200.13]	-14.843 [-377.01]
WBX	29.53 [750.1]	23.50 [596.9]	.000 [0]	-3.528 [-89.61]	.000 [0]

15

THIRD ANGLE PROJECTION

ERNEST ORLANDO LAWRENCE
BERKELEY NATIONAL LABORATORY
UNIVERSITY OF CALIFORNIA - BERKELEY

LHC IR FEEDBOX
MAJOR ASSEMBLY
DFBXA (IP1, LEFT) FEED BOX ASSY

MICROFILMED:	DWG. TYPE	SHOWN ON	SCALE: 13/100	DO NOT SCALE PRINTS
	ASSEM	-	SHEET 8 OF 11	
PATENT CLEAR:	DESIGN ACCT. NO.	CATEGORY CODE	DWG. NO.	SIZE / REV.
	Z5LCE2	LH2001	24C3516	C

DWG. NO. 24C3516 SHEET NO. 8

LBNL Document Control Center

Officially Released to the LBNL Document Control Center
Released: March 5th, 2003 DCC Auth Key: RY7MY413TQ

Downloaded by: Daniel Pulsifer at April 09, 2007 10:57:26

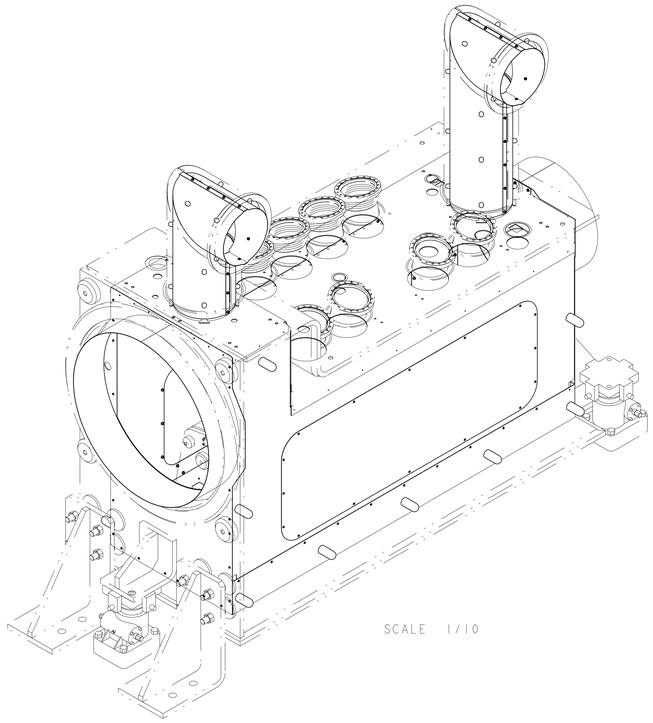

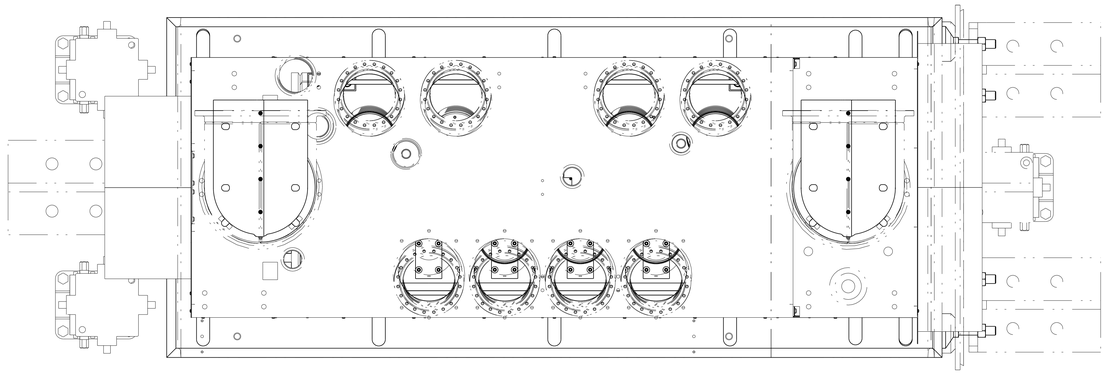

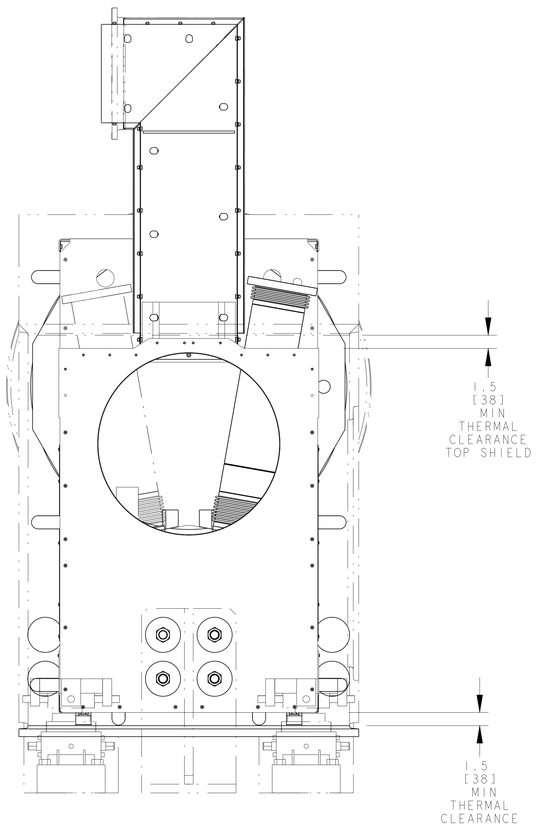

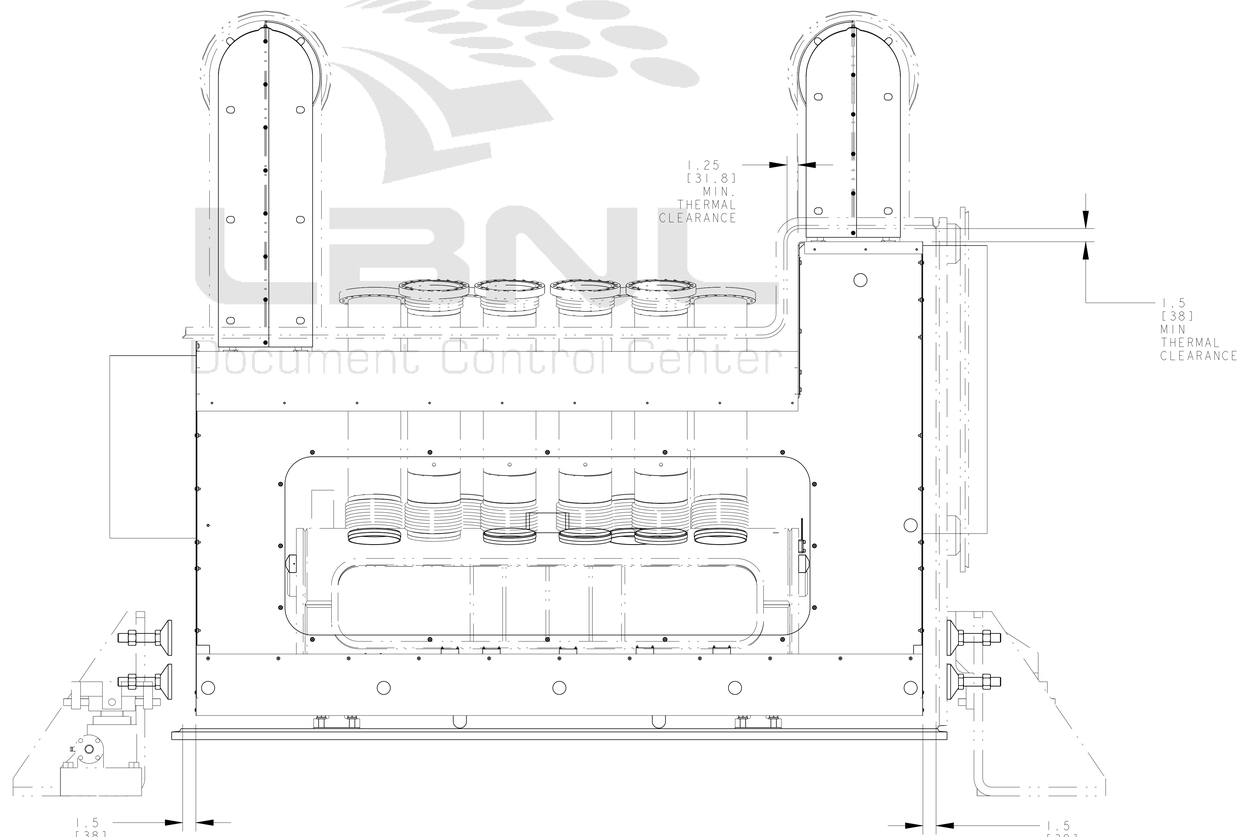

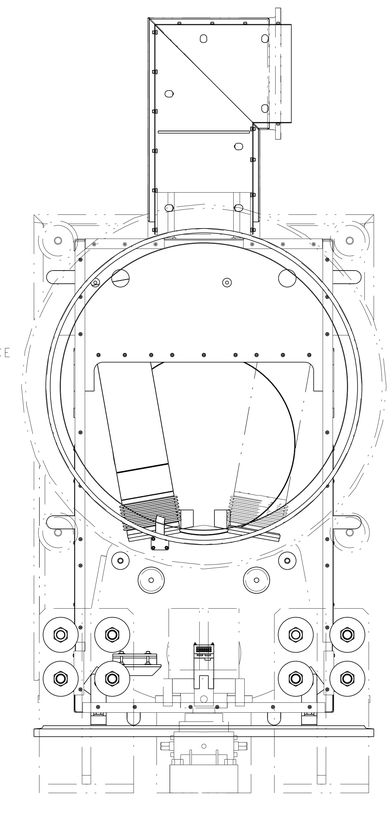

THERMAL SHIELD LAYOUT
COMPONENTS REMOVED FOR CLARITY
SCALE 3/20

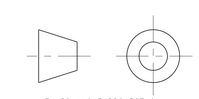

ERNEST ORLANDO LAWRENCE
BERKELEY NATIONAL LABORATORY
UNIVERSITY OF CALIFORNIA - BERKELEY

LHC IR FEEDBOX
MAJOR ASSEMBLY
DFBXA (IP1, LEFT) FEED BOX ASSY

MICROFILMED:	DWG. TYPE	SHOWN ON	SCALE: 13/100	DO NOT SCALE PRINTS
	ASSEM	-	SHEET 9 OF 11	
PATENT CLEAR:	DESIGN ACCT. NO.	CATEGORY CODE	DWG. NO.	SIZE / REV.
	Z5LCE2	LH2001	24C3516	C

DWG. NO. 24C3516 SIZE C REV. 9

Officially Released to the LBNL Document Control Center
Released: March 5th, 2003 DCC Auth Key: RY7MY4I3TQ
Downloaded by: Daniel Pulsifer at April 09, 2007 10:57:26

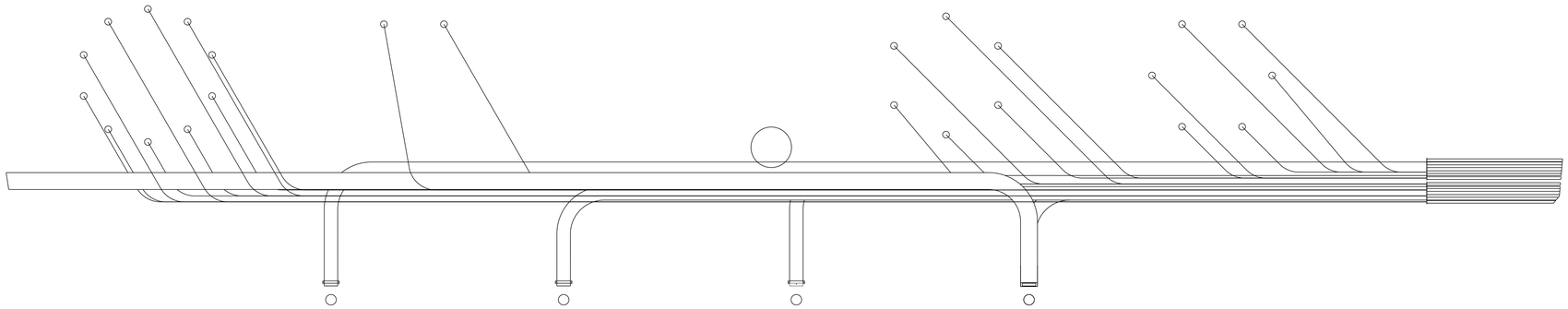

BUS CONDUCTOR RUNS

DETAIL N
SCALE 1/2

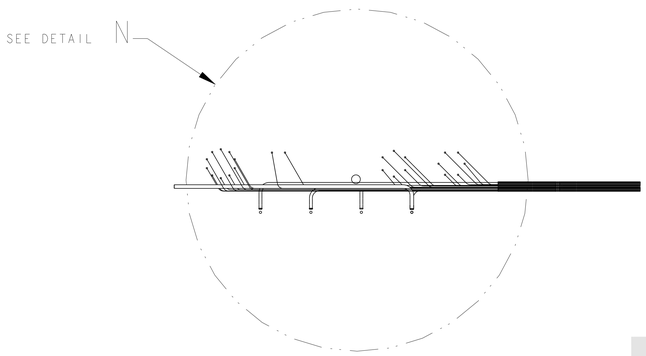

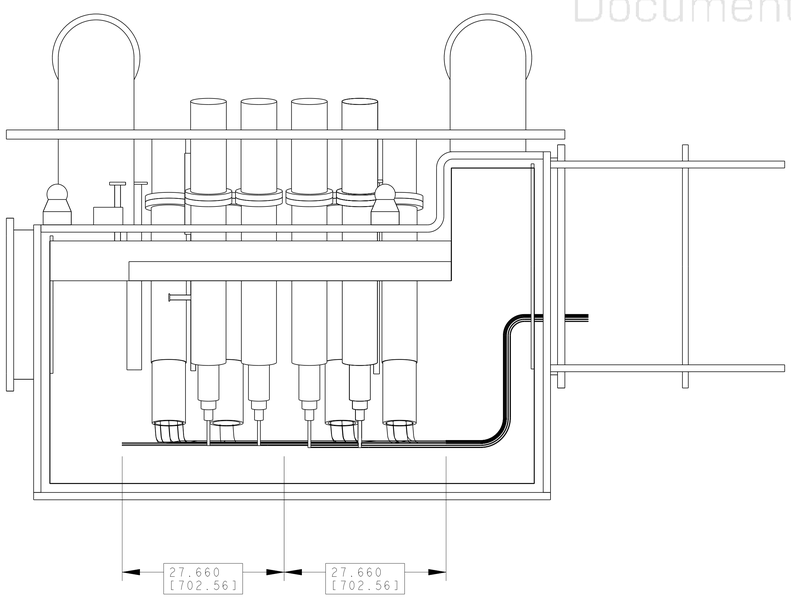

SCALE 1/10

LBNL
Document Control Center

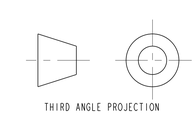

THIRD ANGLE PROJECTION

ERNEST ORLANDO LAWRENCE
BERKELEY NATIONAL LABORATORY
UNIVERSITY OF CALIFORNIA - BERKELEY

LHC IR FEEDBOX
MAJOR ASSEMBLY
DFBXA (IP1, LEFT) FEED BOX ASSY

MICROFILMED:	DWG. TYPE	SHOWN ON	SCALE: 13/100	DO NOT SCALE PRINTS
	ASSEM	-	SHEET 10 OF 11	
PATENT CLEAR:	DESIGN ACCT. NO.	CATEGORY CODE	DWG. NO.	SIZE / REV.
	Z5LCE2	LH2001	24C3516	C

DWG. NO. 24C3516 SIZE C REV. 10

Officially Released to the LBNL Document Control Center
Released: March 5th, 2003 DCC Auth Key: RY7MY4I3TQ
Downloaded by: Daniel Pulsifer at April 09, 2007 10:57:26

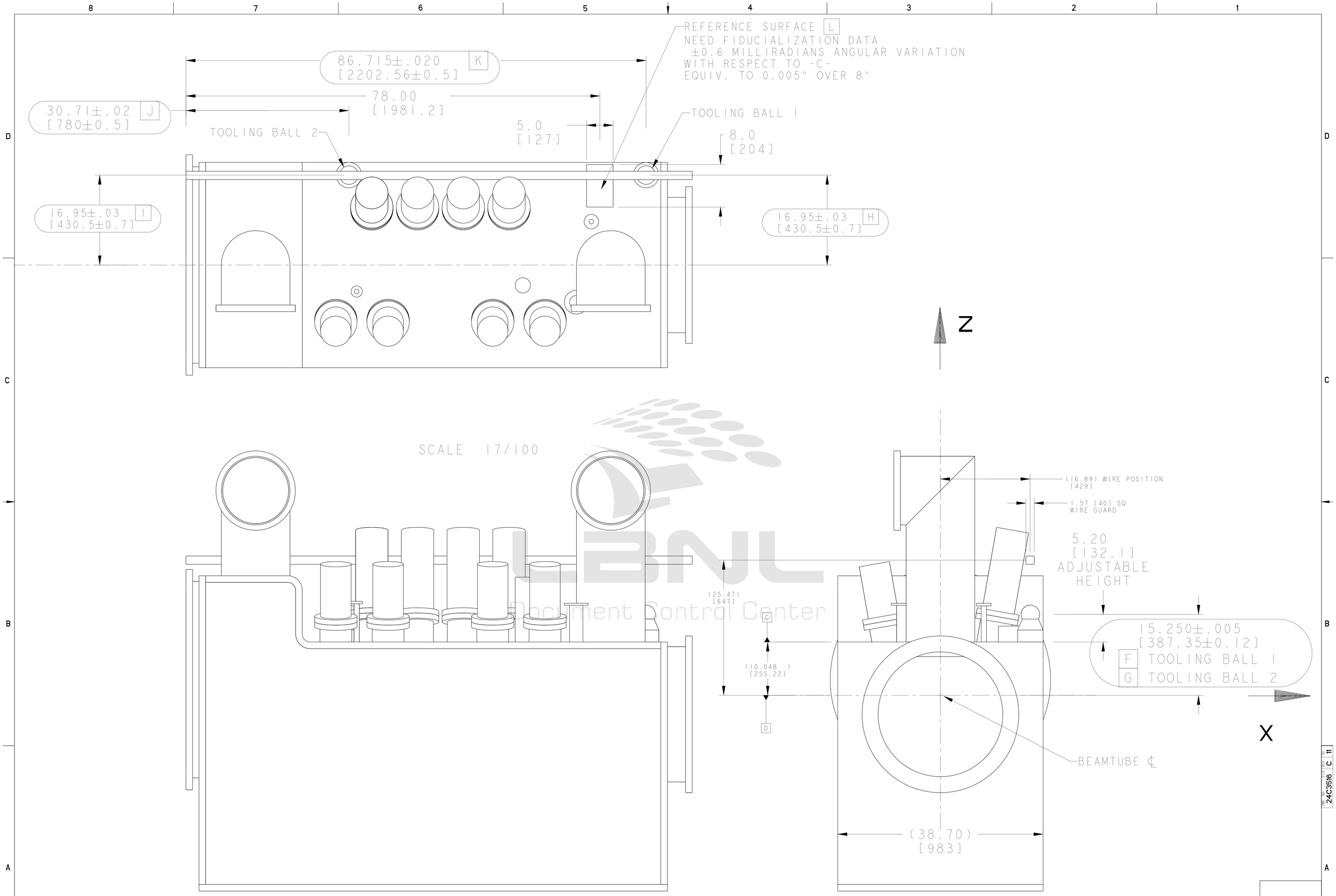

FIDUCIAL LAYOUT INFORMATION

THIRD ANGLE PROJECTION

ERNEST ORLANDO LAWRENCE
BERKELEY NATIONAL LABORATORY
UNIVERSITY OF CALIFORNIA - BERKELEY

LHC IR FEEDBOX
MAJOR ASSEMBLY
DFBXA (IP1, LEFT) FEED BOX ASSY

MICROFILMED:	DWG. TYPE	SHOWN ON	SCALE: 13/100	DO NOT SCALE PRINTS
	ASSEM	-	SHEET 11 OF 11	
PATENT CLEAR:	DESIGN ACCT. NO.	CATEGORY CODE	DWG. NO.	SIZE / REV.
	Z5LCE2	LH2001	24C3516	C

DWG. NO. 24C3516 SIZE C REV. 11

Officially Released to the LBNL Document Control Center
Released: March 5th, 2003 DCC Auth Key: RY7MY4I3TQ
Downloaded by: Daniel Pulsifer at April 09, 2007 10:57:26