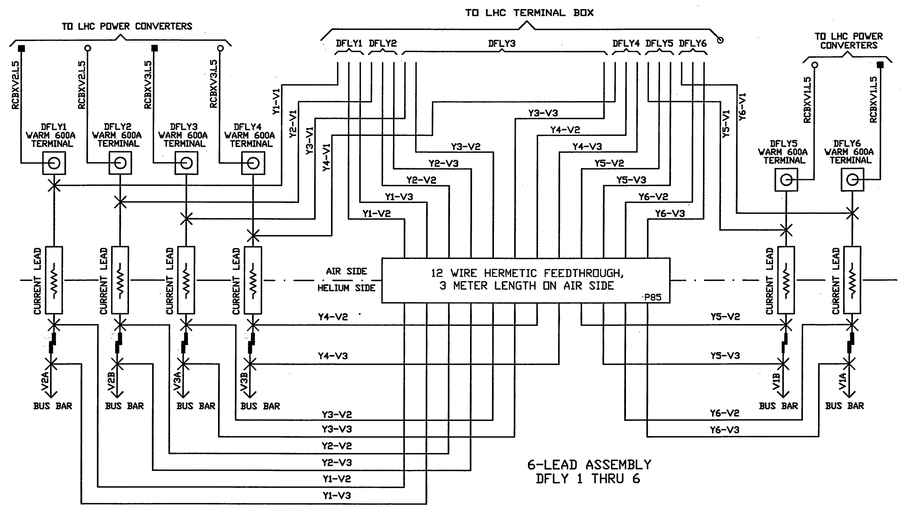

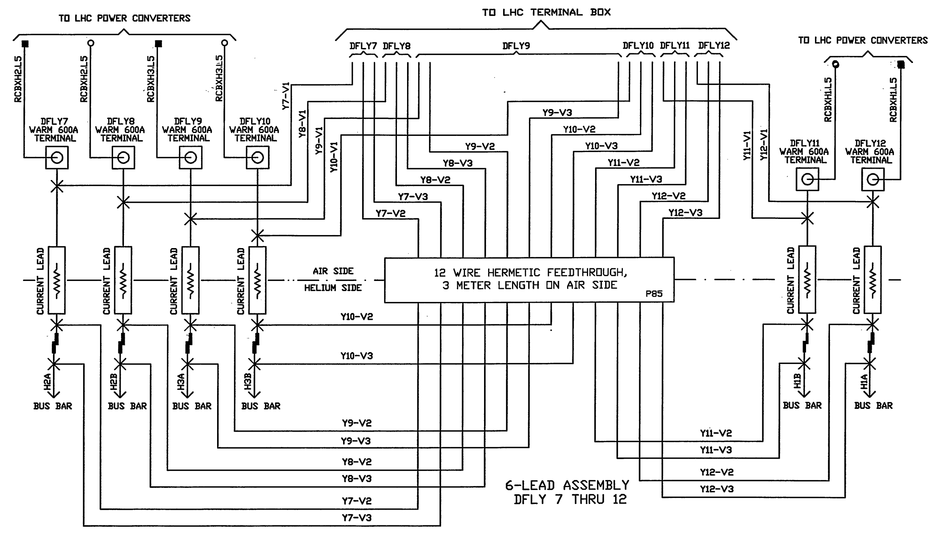

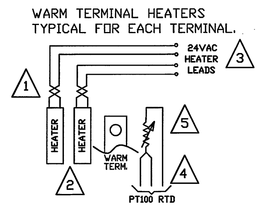

1

600A LEADS (DFLY)

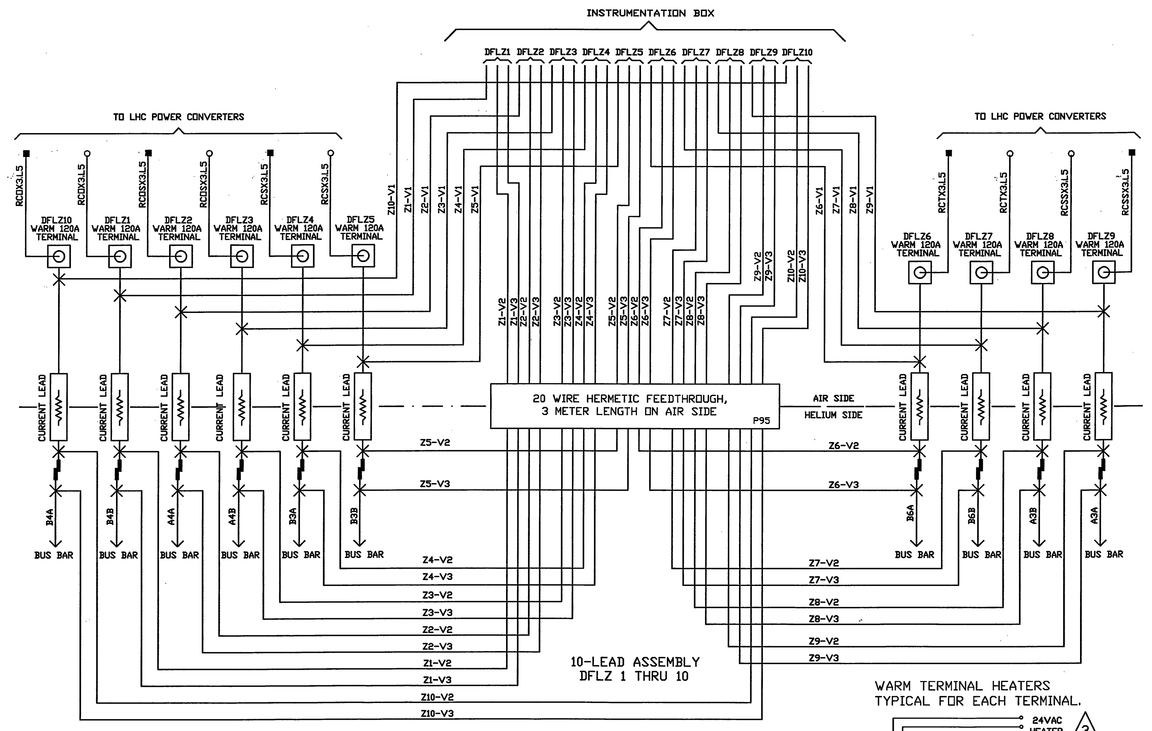

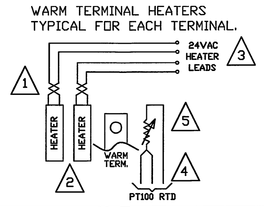

2

120A LEADS (DFLZ)

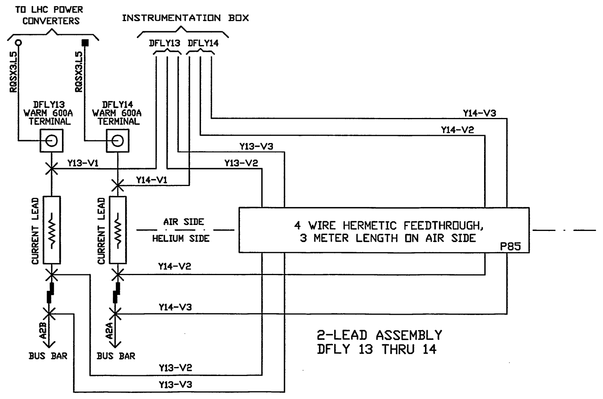

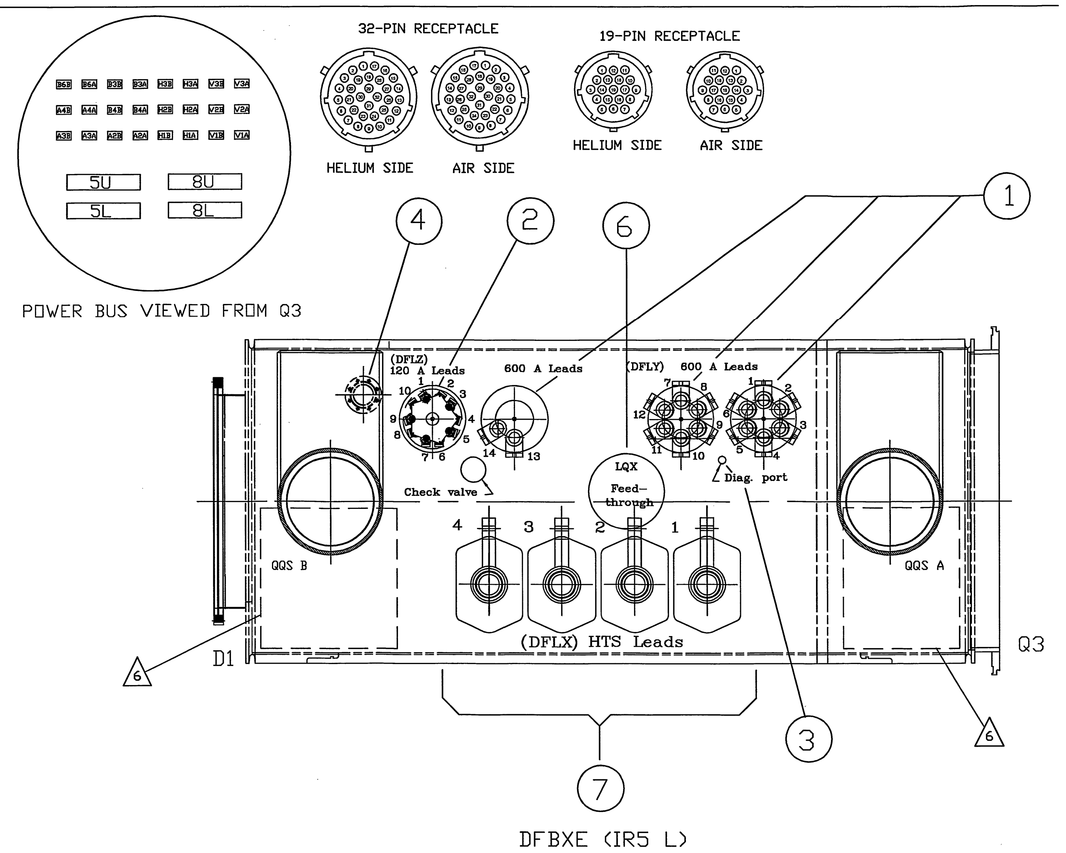

DFBXE (IR5 L)

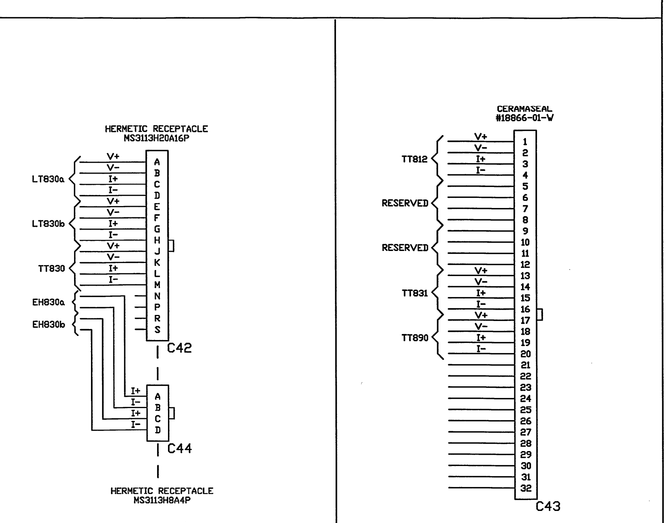

3

LEAD CHAMBER SERVICE PORT

4

CRYOGENIC PIPING SIGNALS

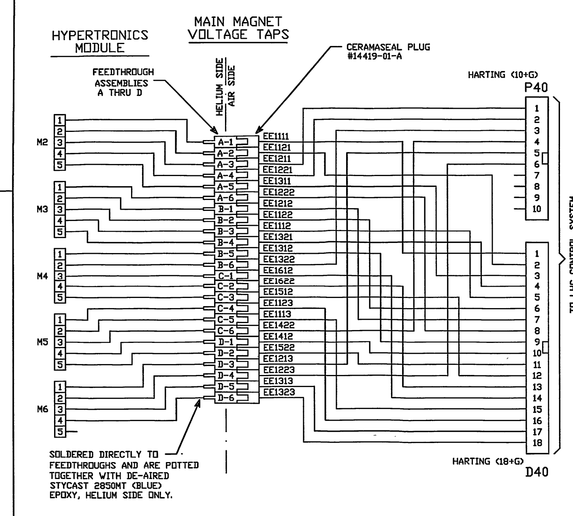

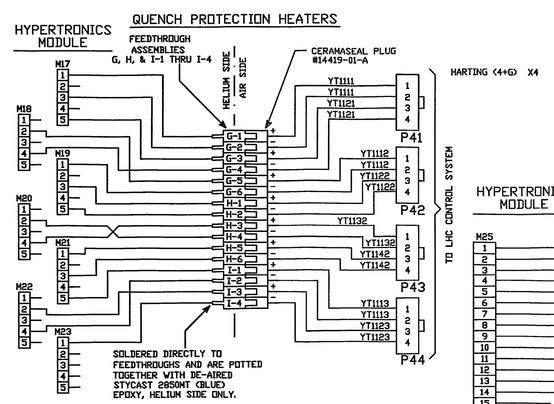

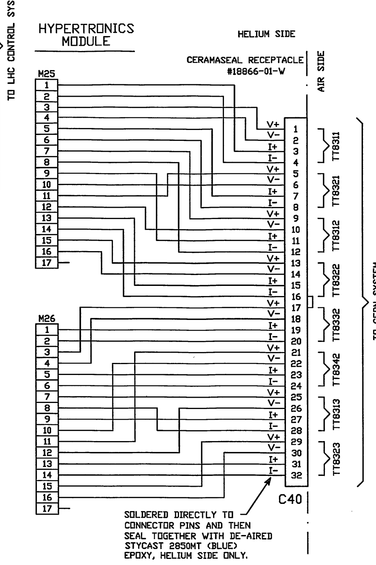

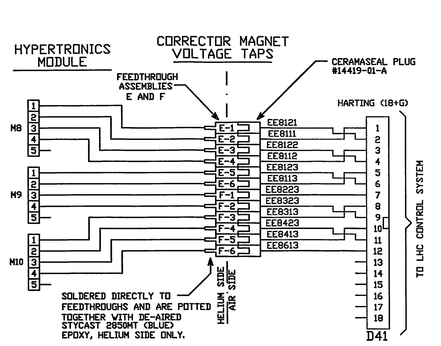

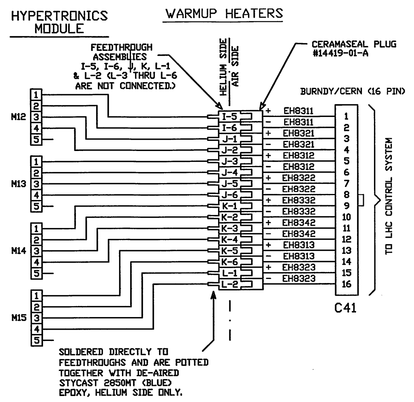

6 LQX

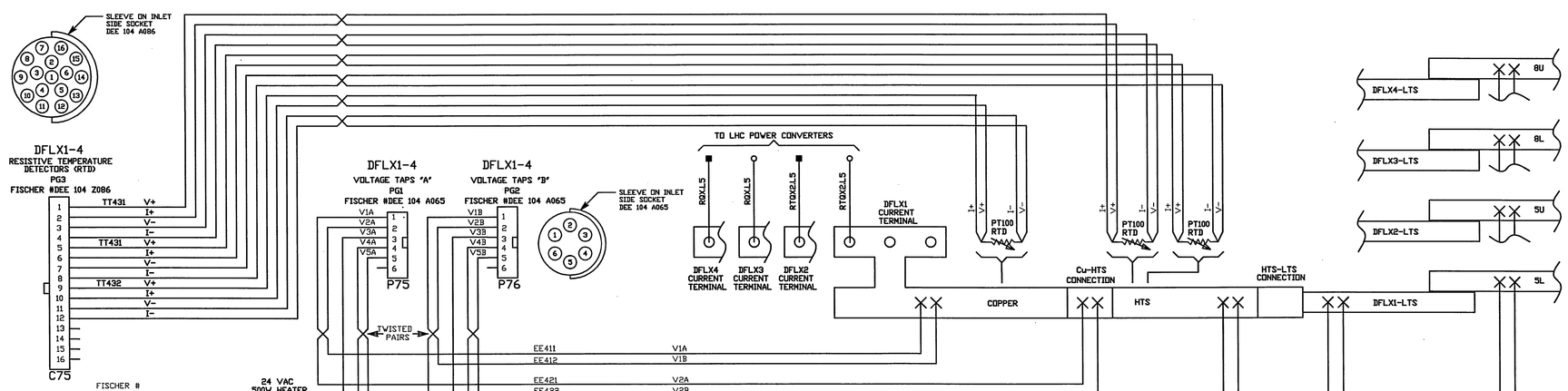

7

HTS LEADS (DFLX)

SYMBOL LEGEND
■ = A SIDE
○ = B SIDE
X = SOLDER JOINT
= CORRECTOR BUS SPLICE
600A LAP JOINTS PER LBNL PROCEDURE M985 AND 120A LAP JOINTS PER LBNL PROCEDURE M983.
= MAIN BUS SPLICE PER LBNL PROCEDURE M985

NOTES:

1. BUNDLE AND LABEL EACH 4-WIRE HEATER CABLE WITH "EH411", FOLLOWED BY THE CURRENT LEAD DESIGNATION, FOR EXAMPLE "113". WIRE LENGTH TO BE 3 METERS.
2. DFLY HEATER TOTAL POWER: 32V @ 24V, DFLZ HEATER TOTAL POWER: 20V @ 24V.
3. HEATERS TO BE POWERED IN PARALLEL WITH 24V SUPPLY. CONNECTIONS MADE AT CERN.
4. BUNDLE AND LABEL EACH 3-WIRE RTD CABLE WITH "IT491", FOLLOWED BY THE CURRENT LEAD DESIGNATION, FOR EXAMPLE "Z09". WIRE LENGTH TO BE 3 METERS.
5. SENSOR RESISTANCE PER IEC 751, CLASS B.
6. LOCATIONS OF CERN INSTRUMENT BOX

REV	DWG	CHK	ZONE	DATE	CHANGES
B			C7, A5		1) a) ADDED 19 AND 32 PIN CONN. PINOUTS, b) CORRECTED C75 WIRING, c) CHANGED C42, C43, C44.
			A1-B3		2) a) ADDED NOTES b) ADDED VIEW OF POWER BUSS.
			A4-A8		3) IN BOX 7: a) ADDED CERN-SPECIFIED CONNECTOR DESIGNATIONS, b) CHANGED HTS LEAD THERMOMETER PINOUTS IN C75, c) CHANGED HTS LEAD VOLTAGE TAP PINOUTS IN P75 AND P76.
			B4-C6		4) IN BOX 6: a) CHANGED CONNECTORS FROM FISCHER TO HARTING AND BURNDY b) CHANGED VOLTAGE TAP, HEATER AND TT DESIGNATIONS. c) CHANGED C40 PINOUTS AND ADDED EE DESIGNATIONS.
			B8		5) IN BOX 3: CHANGED CONNECTOR CONFIGURATION.
			D1-C3		6) IN BOX 2: a) SEPARATE POWER FOR HEATERS, b) WIRE LABELS SIMPLIFIED, c) CHANGED FEEDTHROUGH DESIGNATION.
A			D4-C8		7) IN BOX 1: a) SEPARATE POWER FOR HEATERS, b) WIRE LABELS SIMPLIFIED, c) CHANGED FEED THROUGH DESIGNATION.

UNLESS OTHERWISE SPECIFIED: FRAC. ± 1/64; X.X ± 0.1; X.XX ± 0.03; Angles ± 1.00°; X.XXX ± 0.010; FINISH 125 RMS

DO NOT SCALE PRINT

THREADS ARE CLASS 2
CHAMFER ENDS OF ALL SCREW THREADS 30°
CUT ROUND, 1.5 THREAD RELIEF ON MACHINED THREADS
BREAK EDGES .016 MAX. ON MACHINED WORK
REMOVE BURRS, FIELD SPLATTER & LOOSE SCALE
IN ACCORDANCE WITH ASME Y14.5M & ANSI

SHOP ORDERS: ACCT NO. / RO. NO. 1020; DATE; DATE 1020; XOL TO; DATE 1020; SURFACE TREATMT; IDENT METHOD; PROJECT NUMBER; PROJECT NAME

DWG BY	J. STIRKKINEN	DATE	04-23-02
CHK BY	B. BINGHAM	DATE	7/9/04
APR BY	J. ZBASNIK	DATE	7/9/04

DESCRIPTION	MATERIAL	MAT. LOCATION

ERNEST ORLANDO LAWRENCE BERKELEY NATIONAL LABORATORY
UNIVERSITY OF CALIFORNIA - BERKELEY

LHC IR FEEDBOX
ELECTRICAL
DFBXE (IR5 L) WIRING DIAGRAMS

MICROFILMED:	DWG. TYPE ASSEMBLY	SHOWN ON	SCALE: 1/1	DO NOT SCALE PRINTS
			SHEET 1 OF 1	
PATENT CLEAR:	Z5LCE2 DESIGN ACCT. NO.	LH2004 CATEGORY CODE	2516176	REV. B

LHC_FILE: 2516176B.DWG

Officially Released to the LBNL Document Control Center
Released: July 9th, 2004 DCC Auth Key: FNPQ8DR051
Downloaded by: Brad Bingham at October 01, 2004 11:29:19