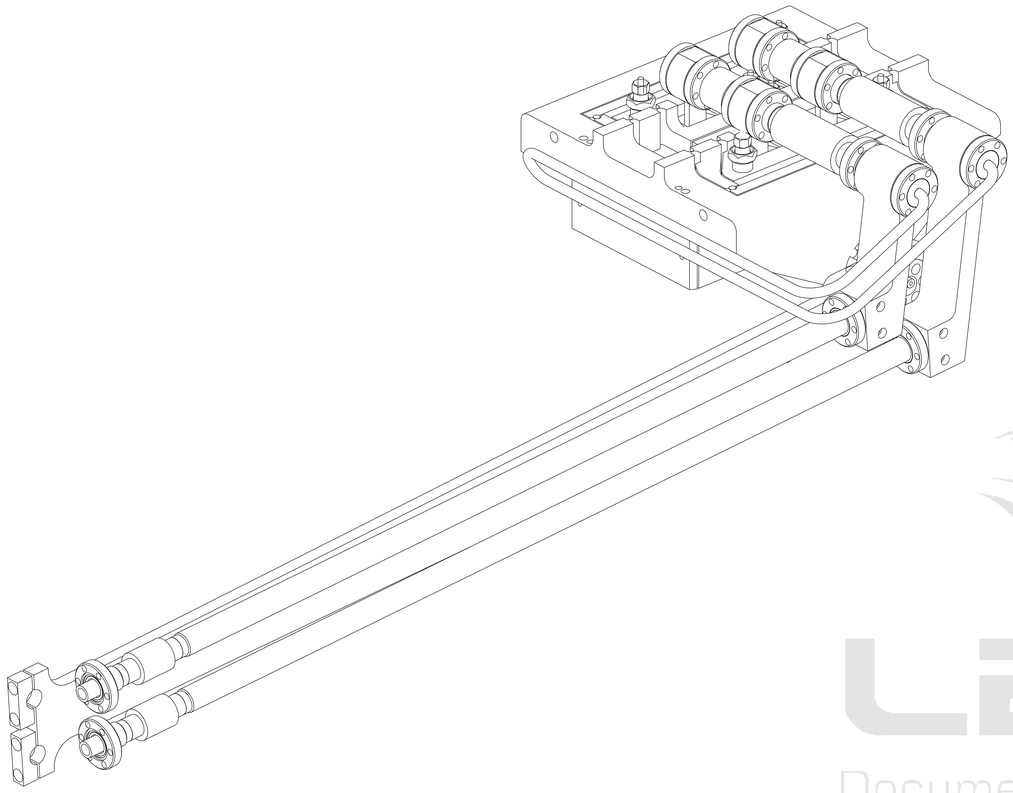

ASSEMBLED VIEW

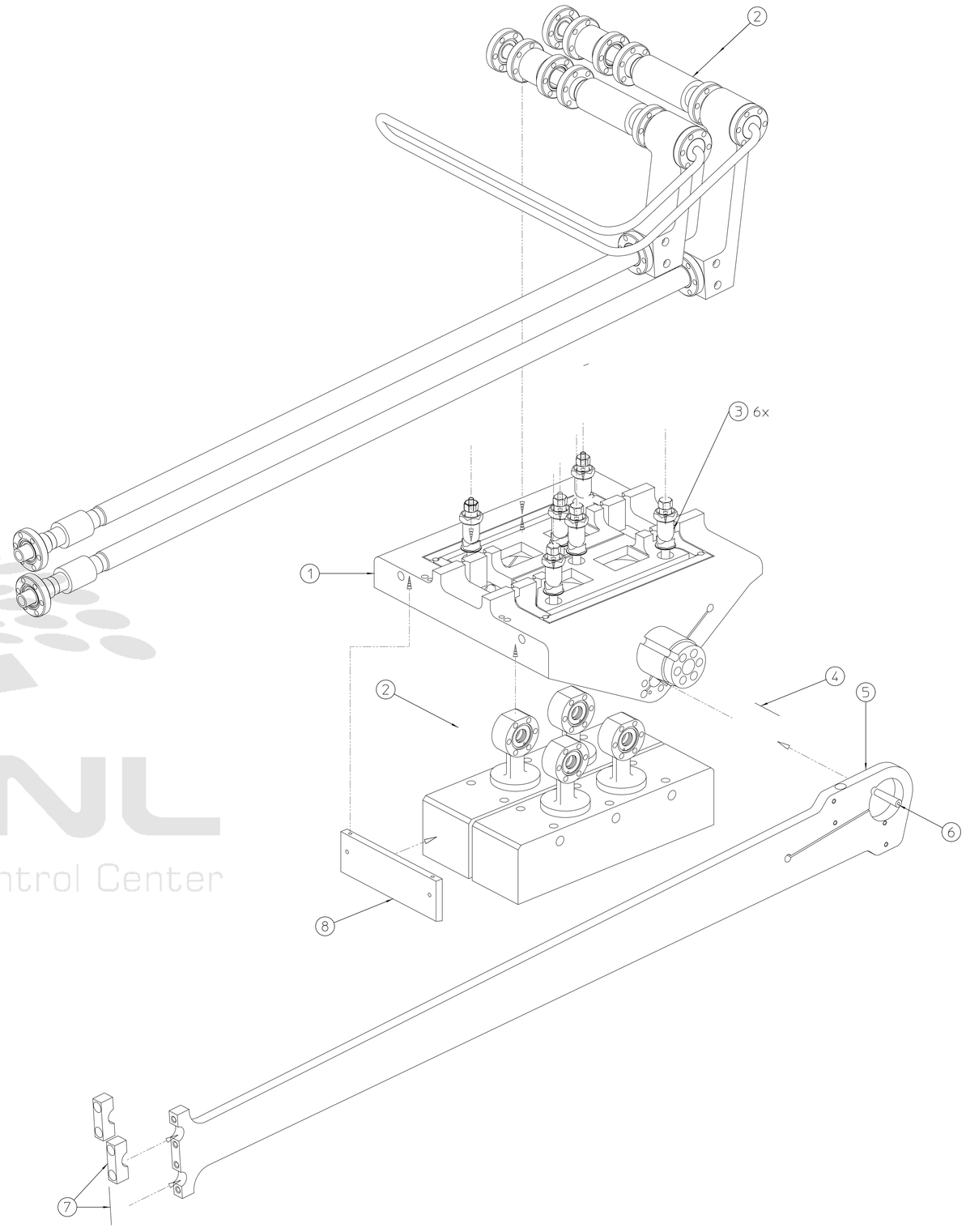

EXPLODED VIEW

NOTES. UNLESS OTHERWISE SPECIFIED:

1. DIMENSIONS AND TOLERANCES PER ASME Y14.5M-1994. ALL DIMENSIONS ARE IN INCHES. REFERENCE DIMENSIONS ARE SHOWN IN PARETHESES. NOT ALL HIDDEN LINES ARE SHOWN.

2. THIS IS AN ULTRA-HIGH VACUUM (UHV) PART AND REQUIRES SPECIAL ATTENTION TO AVOID UHV CONTAMINATION. READ LBNL SPECIFICATION M773 BEFORE PERFORMING ANY FABRICATION.

3. PROTECT FINISHED PART BY BAGGING OR SIMILAR METHOD TO PROTECT AND MAINTAIN CLEANLINESS DURING SHIPMENT AND STORAGE. TAKE CARE NOT TO DING. SCRATCH. DENT. OR OTHERWISE MARK ANY ANY MACHINED SURFACE.

REQD	ITEM	PART NO.	DESCRIPTION
1	8	26B708	MASK, GRATING
2	7	26A745	PIVOT CLAMP, SINEBAR
1	6	- -	TAPER PIN, SINEBAR TO PIVOT
1	5	26B729	SINEBAR, GRATING
1	4	26B009	CRADLE PIVOT
6	3	26A963	ADJUSTER ASSEMBLY
2	2	26B698	COOLING SYSTEM ASSEMBLY
1	1	26B900	CRADLE

REV	AUTHOR	APPROVER	DATE	CHANGE DESCRIPTION
B	winger!	winger!	05-05-05	CHANGED BOM PART NUMBER
A	winger!	winger!	04-07-05	INITIAL REVISION

UNLESS OTHERWISE SPECIFIED
TOLERANCES: .X± .- .XX± .-- .XXX± .---
FRACTIONS: ± -/--
ANGLES: ± - .-°/INCH
MACH. SURFS.: 125 OR BETTER
REF ASME Y14.5M-1994, THREADS ARE CLASS 2
BREAK EDGES .016 MAX. ON MACHINED WORK
REMOVE BURRS, WELD SPLATTER & LOOSE SCALE

PROJECT NAME:
Advanced Light Source
UNIQUE NUMBER: AL-0013-1772
DO NOT SCALE PRINT
SCALE: NO SCALE
CATEGORY CODE: AL 4045
THIRD ANGLE PROJECTION

ERNEST ORLANDO LAWRENCE
BERKELEY NATIONAL LABORATORY
UNIVERSITY OF CALIFORNIA

ALS - INSERTION DEVICE BEAMLINES
BL 4.0.2 - MONOCHROMATOR
GRATING ASSEMBLY

SHEET 1 OF 1 | SIZE: E | DWG NO: 26B697 | REV B

AUTO GENERATED PDF
May 05 2005 11:31:47 PDT

Officially Released to the LBNL Document Control Center
Released: May 5th, 2005 DCC Auth Key: P64KUN4LN0
Downloaded by: David W Plate at May 09, 2005 07:48:44