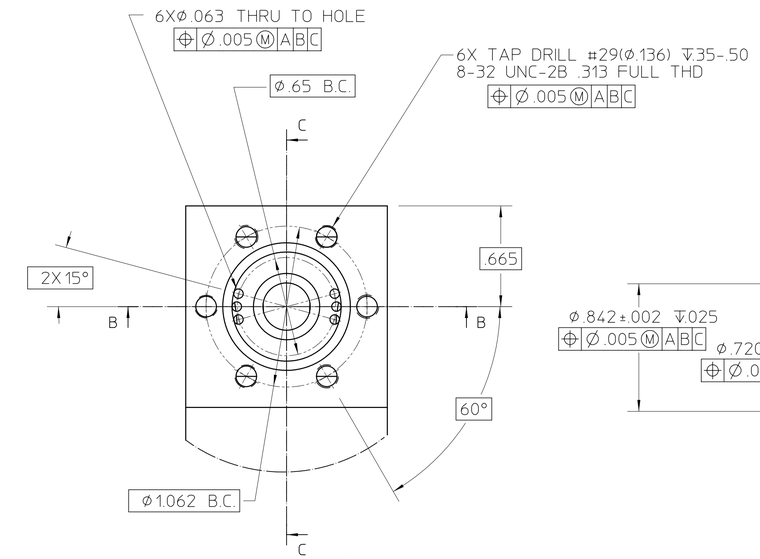

DETAIL 1
SCALE 2/1
STANDARD 1-1/3 MINI-CFF KNIFE EDGE

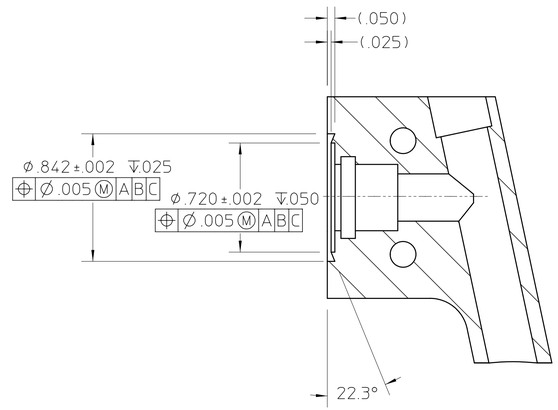

SECTION C-C
SCALE 2/1
STANDARD 1-1/3 MINI-CFF KNIFE EDGE

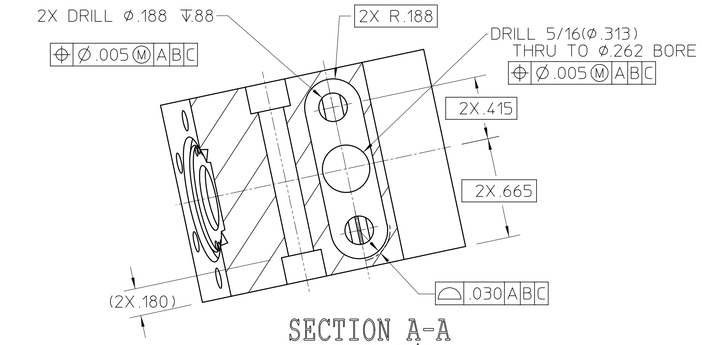

SECTION A-A
SCALE 2/1

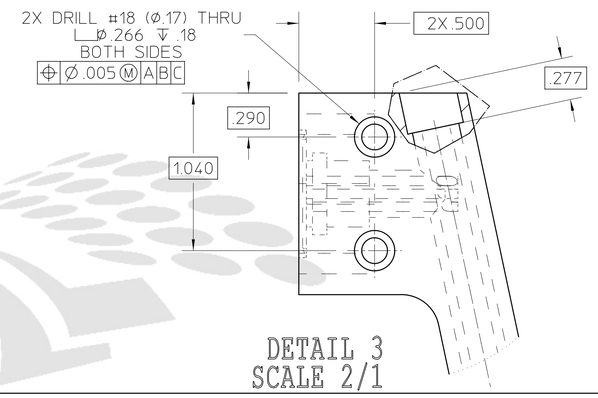

DETAIL 3
SCALE 2/1

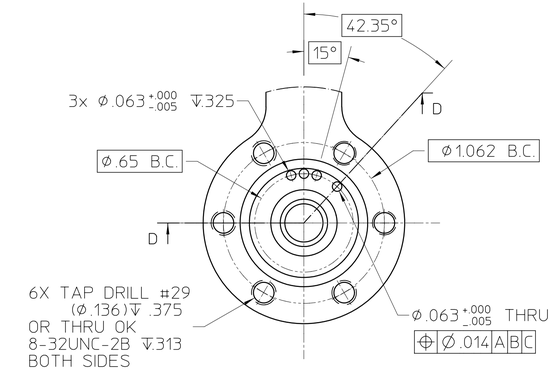

DETAIL 2
SCALE 2/1

STANDARD 1-1/3 MINI-CFF KNIFE EDGE
ROTATED 12° FOR CLARITY
STANDARD 1-1/3 MINI-CFF KNIFE EDGE

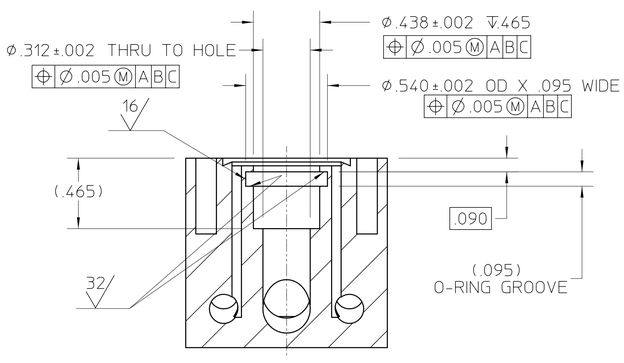

SECTION B-B
SCALE 2/1
STANDARD 1-1/3 MINI-CFF KNIFE EDGE

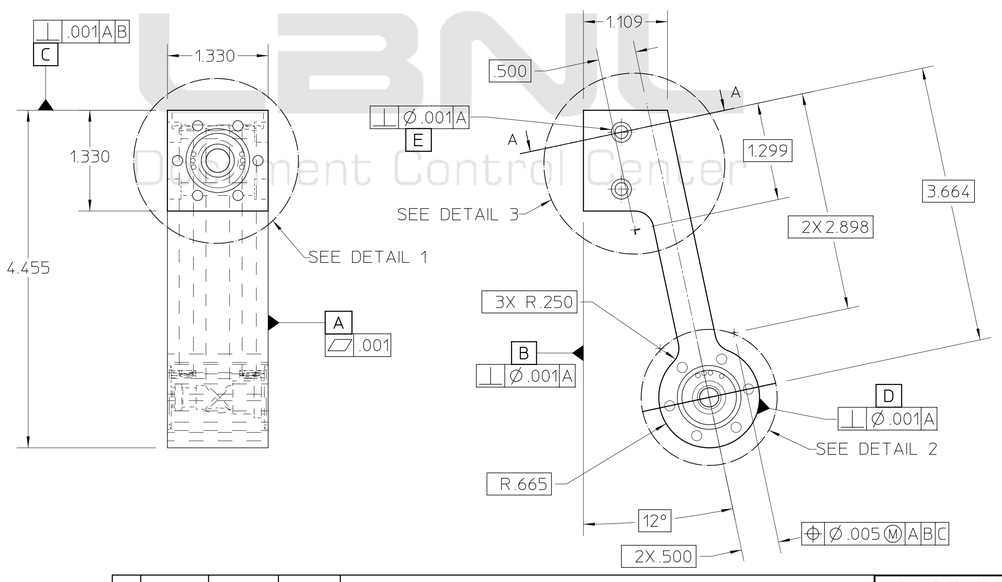

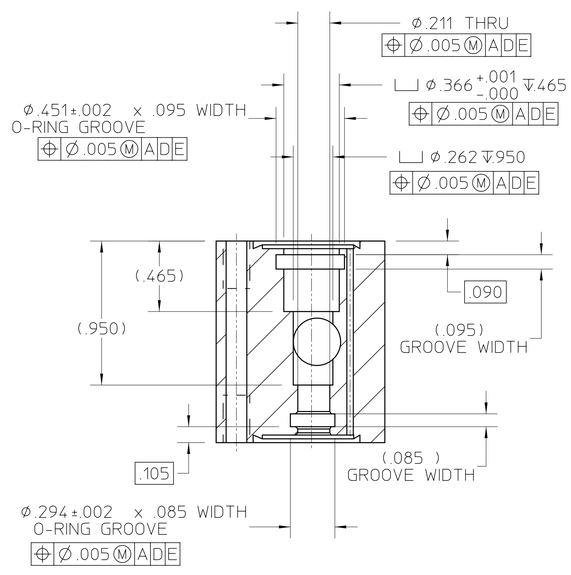

SECTION D-D
SCALE 2/1
STANDARD 1-1/3 MINI-CFF KNIFE EDGE

NOTES,UNLESS OTHERWISE SPECIFIED:
1. THIS IS A ULTRA HIGH VACUUM COMPONENT AND REQUIRES SPECIAL ATTENTION TO AVOID CONTAMINATION. REFER TO LBNL ENGINEERING SPECIFICATION #M20013. HIGH VACUUM USE CLEANING.
2. PROTECT ALL CONFLAT FLANGE KNIFE SEALING SURFACES AT ALL TIMES FROM ANY DENTS, DINGS OR SCRATCHES ON KNIFE EDGE ARE NOT ACCEPTABLE.

REV	AUTHOR	APPROVER	DATE	CHANGE DESCRIPTION
B	wingert	wingert	06-02-05	
A	wingert	wingert	04-08-05	INITIAL REVISION

UNLESS OTHERWISE SPECIFIED
TOLERANCES: .X± .06 .XX± .02 .XXX± .005
FRACTIONS: ± 1/64
ANGLES: ± 0.5°/INCH
MACH. SURFS.: 125 ✓ OR BETTER
REF: ASME Y14.5M-1994, THREADS ARE CLASS 2
BREAK EDGES .016 MAX. ON MACHINED WORK
REMOVE BURRS, WELD SPLATTER & LOOSE SCALE

MAT 2: . NOTES:
MAT 1: .SST TYPE 304 NOTES:

PROJECT NAME: Advanced Light Source
UNIQUE NUMBER: AL-0013-1552
DO NOT SCALE PRINT SCALE: 1 : 1
CATEGORY CODE: AL4045
THIRD ANGLE PROJECTION

ERNEST ORLANDO LAWRENCE
BERKELEY NATIONAL LABORATORY
UNIVERSITY OF CALIFORNIA

ALS - INSERTION DEVICE BEAMLINES
BL 4.0.2 - MONOCHROMATOR
MIRROR COOLING, SUPPLY MANIFOLD BODY

SHEET 1 OF 1 | SIZE: D | DWG NO: 26B735 | REV B

AUTO GENERATED PDF
Jun 02 2005 14:31:34 PDT

Officially Released to the LBNL Document Control Center
Released: June 2nd, 2005 DCC Auth Key: BCKTNDE3K3
Downloaded by: David W Plate at June 02, 2005 14:59:28