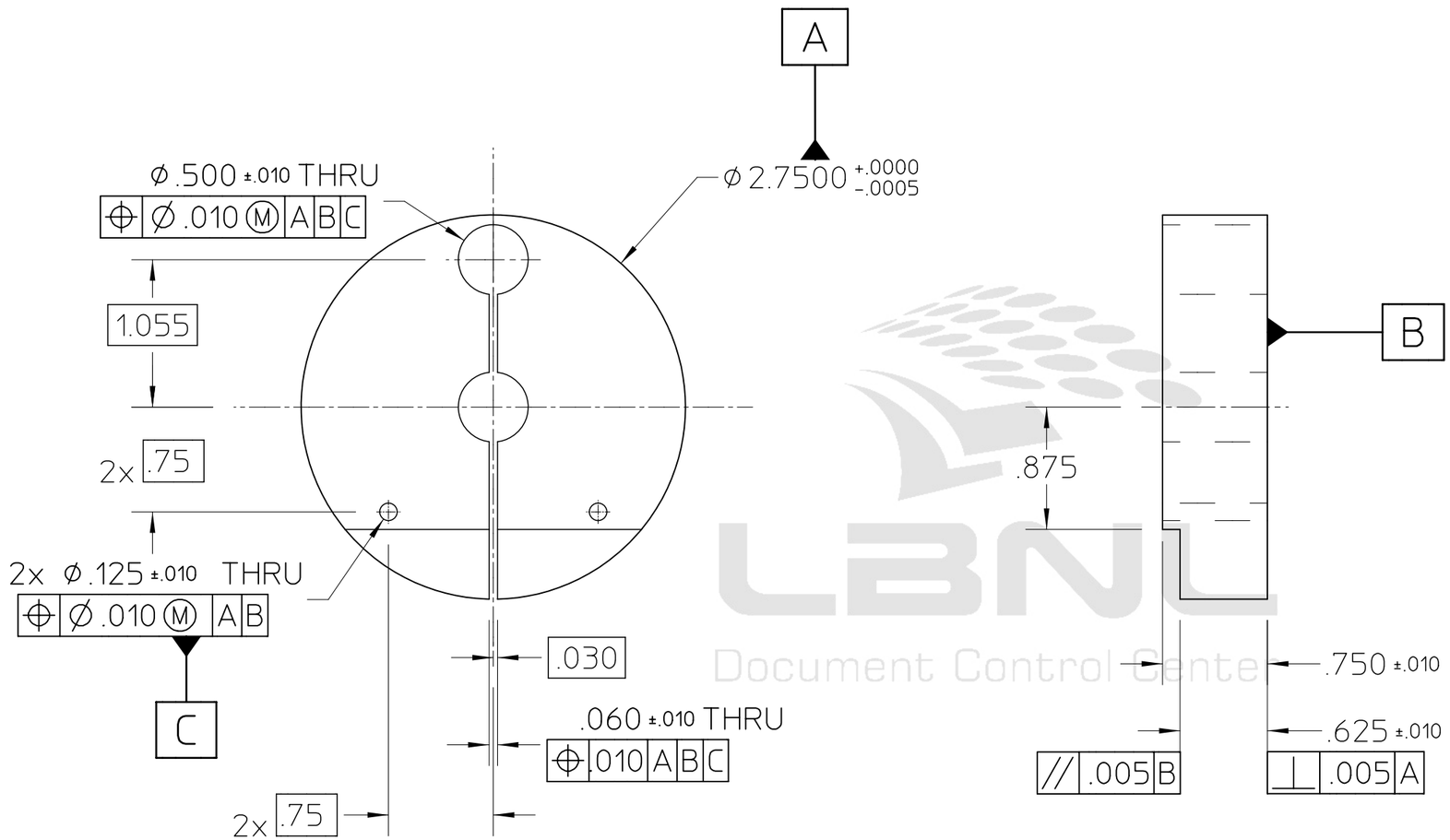

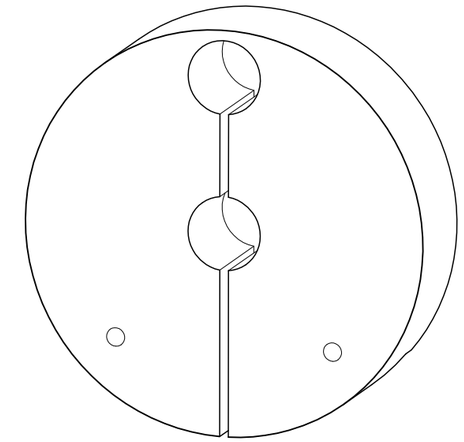

ISOMETRIC VIEW

UNLESS OTHERWISE SPECIFIED:
1) DIMENSIONING AND TOLERANCING PER ASME Y14.5M-1994. ALL DIMENSIONS ARE IN INCHES. REFERENCE DIMENSIONSARE SHOWN IN PARENTHESES. NOT ALL HIDDEN LINES ARE SHOWN.

2) THIS IS AN ULTRA HIGH VACUUM (UHV) PART AND REQUIRES SPECIAL ATTENTION TO AVOID UHV CONTAMINATION. READ LBNL SPECIFICATION M773 BEFORE PERFORMING ANY FABRICATION.

3) PROTECT FINISHED PART BY BAGGING OR SIMILAR METHODS TO PROTECT AND MAINTAIN CLEANLINESS DURING SHIPMENT AND STORAGE. TAKE EXTREME CARE NOT TO DING, SCRATCH, DENT,OR OTHERWISE MARK ANY MACHINED SURFACE.

REV	AUTHOR	APPROVER	DATE	CHANGE DESCRIPTION
A	wingert	wingert	04-07-05	INITIAL REVISION

UNLESS OTHERWISE SPECIFIED
TOLERANCES: .X± .06 .XX±.02 .XXX±.005
FRACTIONS: ± 1/64
ANGLES: ± 0.5°/INCH
MACH. SURFS.: 125✓ OR BETTER
REF:ASME Y14.5M-1994, THREADS ARE CLASS 2
BREAK EDGES .016 MAX. ON MACHINED WORK
REMOVE BURRS, WELD SPLATTER & LOOSE SCALE

MAT 2: , NOTES:
MAT 1: ,AMPCO 18 NOTES:

PROJECT NAME: Advanced Light Source
UNIQUE NUMBER: AL-0013-1777
DO NOT SCALE PRINT
SCALE: 1 : 1
CATEGORY CODE: AL4045
THIRD ANGLE PROJECTION

ERNEST ORLANDO LAWRENCE BERKELEY NATIONAL LABORATORY
UNIVERSITY OF CALIFORNIA

ALS - INSERTION DEVICE BEAMLINES
BL 4.0.2 - MONOCHROMATOR
SUPPORT, LEFT UPRIGHT SLEEVE

SHEET 1 OF 1 | SIZE: B | DWG NO: 26B758 | REV A

Officially Released to the LBNL Document Control Center
Released: April 7th, 2005 DCC Auth Key: 4BSIVHNFEA
Downloaded by: David W Plate at April 13, 2005 13:02:48
AUTO GENERATED PDF
Apr 07 2005 15:12:05 PDT