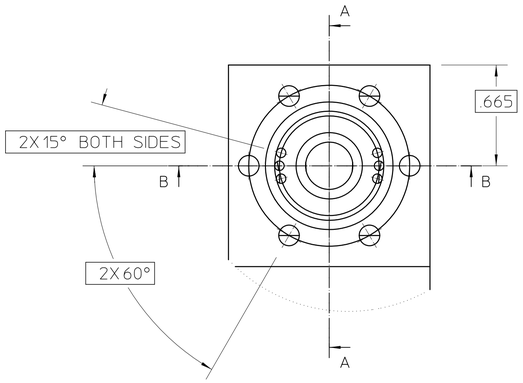

Detail1
SCALE 2/1
STANDARD 1-1/2 MINI-CFF KNIFE EDGE

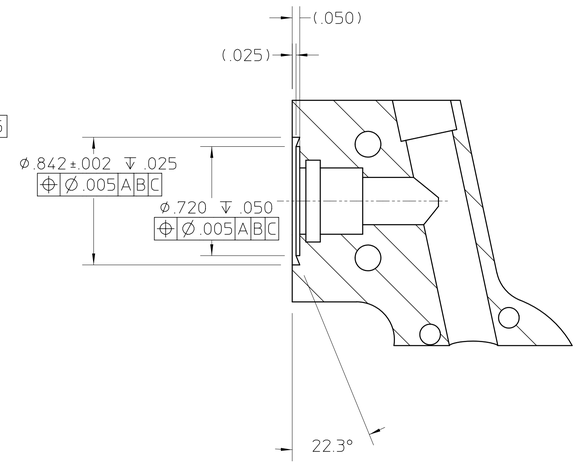

SECTION A-A
SCALE 2/1
STANDARD 1-1/2 MINI-CFF KNIFE EDGE

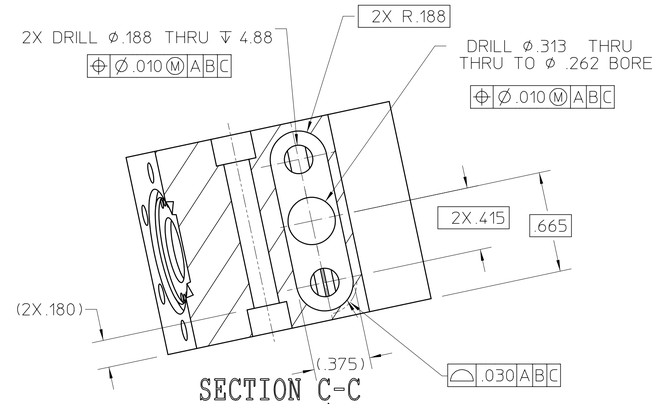

SECTION C-C
SCALE 2/1

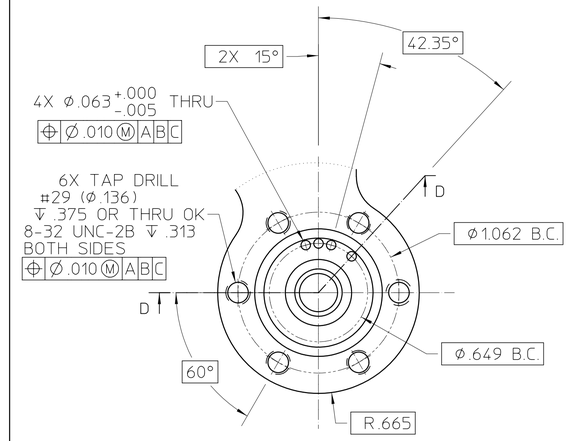

Detail3
SCALE 2/1
STANDARD 1-1/2 MINI-CFF KNIFE EDGE
ROTATED 12° FOR CLARITY

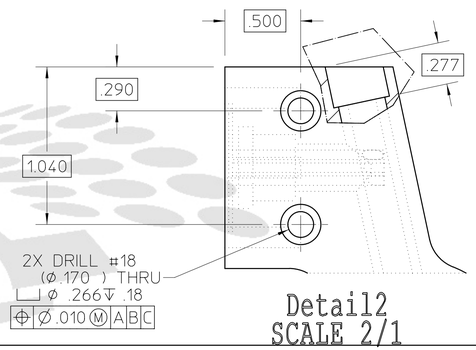

Detail2
SCALE 2/1

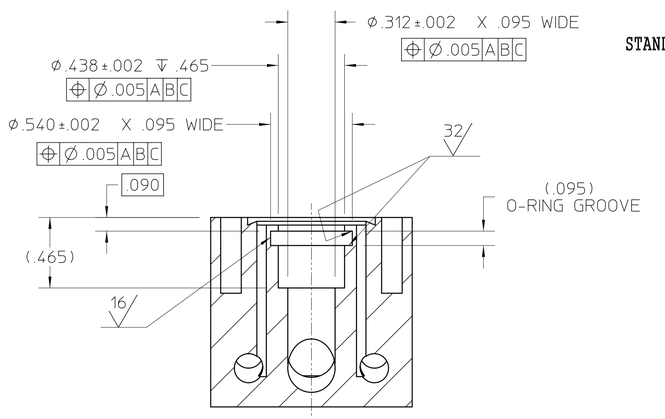

SECTION B-B
SCALE 2/1
STANDARD 1-1/2 MINI-CFF KNIFE EDGE

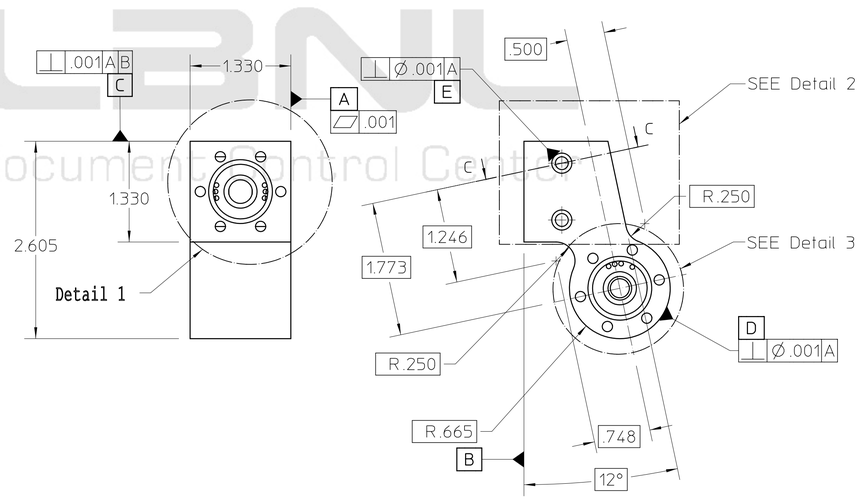

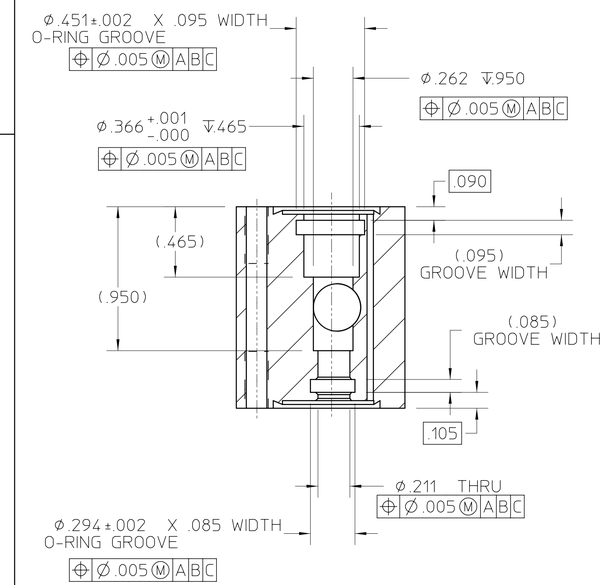

SECTION D-D
SCALE 2/1
STANDARD 1-1/2 MINI-CFF KNIFE EDGE

NOTES,UNLESS OTHERWISE SPECIFIED:

1. THIS IS A ULTRA HIGH VACUUM COMPONENT AND REQUIRES SPECIAL ATTENTION TO AVOID CONTAMINATION. REFER TO LBNL ENGINEERING SPECIFICATION #M20013. HIGH VACUUM USE CLEANING.

2. PROTECT ALL CONFLAT FLANGE KNIFE SEALING SURFACES AT ALL TIMES FROM ANY DENTS, DINGS OR SCRATCHES ON KNIFE EDGE ARE NOT ACCEPTABLE.

REV	AUTHOR	APPROVER	DATE	CHANGE DESCRIPTION
A	wingert	wingert	04-08-05	INITIAL REVISION

UNLESS OTHERWISE SPECIFIED
TOLERANCES: .X± .- .XX± .02 .XXX± .005; FRACTIONS: ± 1/64; ANGLES: ± 0.5°/INCH; MACH. SURFS.: 125✓ OR BETTER
REF:ASME Y14.5M-1994, THREADS ARE CLASS 2
BREAK EDGES .016 MAX. ON MACHINED WORK
REMOVE BURRS, WELD SPLATTER & LOOSE SCALE

MAT 2: . NOTES:
MAT 1: . NOTES:

PROJECT NAME: Advanced Light Source
UNIQUE NUMBER: AL-0013-1576
DO NOT SCALE PRINT | CATEGORY CODE:
SCALE: 1 : 1 | AL 4045
THIRD ANGLE PROJECTION

ERNEST ORLANDO LAWRENCE
BERKELEY NATIONAL LABORATORY
UNIVERSITY OF CALIFORNIA

ALS - INSERTION DEVICE BEAMLINES
BL 4.0.2 - MONOCHROMATOR
MIRROR COOLING, RETURN MANIFOLD BODY

SHEET 1 OF 1 | SIZE: D | DWG NO: 26B733 | REV A

AUTO GENERATED PDF
Apr 08 2005 17:11:31 PDT

Officially Released to the LBNL Document Control Center
Released: April 8th, 2005 DCC Auth Key: 5UODORJ8TU
Downloaded by: David W Plate at April 15, 2005 14:13:55