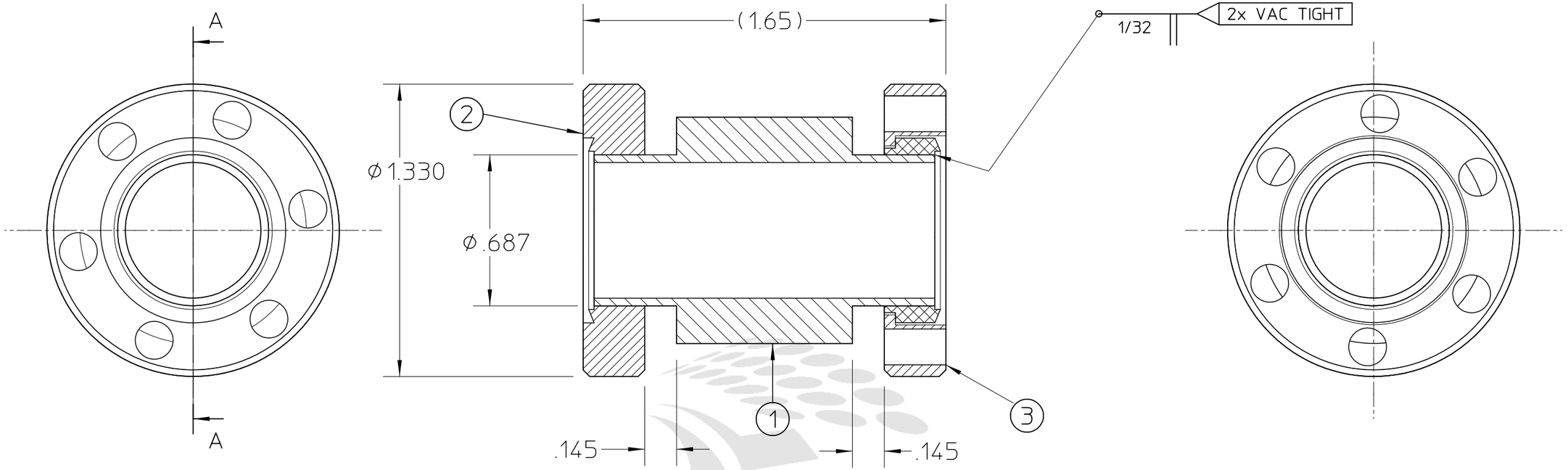

NOTES, UNLESS OTHERWISE SPECIFIED:

1. DIMENSIONS AND TOLERANCES PER ASME Y14.5M-1994. ALL DIMENSIONS ARE IN INCHES. REFERENCE DIMENSIONS ARE SHOWN IN PARETHESES. NOT ALL HIDDEN LINES ARE SHOWN.
2. ALL WELD SYMBOLS PER ANSI/AWS/A2.4-1986.
3. ALL WELDS PER ANSI/AWS /D1.1-1990.
4. ALL WELDING AND BRAZING SHALL BE DONE IN AN OXYGEN FREE ENVIROMENT.
5. THE RESULTS OF FINAL LEAK TESTING MUST BE IN THE UHV RANGE.
6. THIS IS AN ULTRA-HIGH VACUUM (UHV) PART AND REQUIRES SPECIAL ATTENTION TO AVOID UHV CONTAMINATION. READ LBNL SPECIFICATION M773 BEFORE PERFORMING ANY FAB-RICATION.
7. PROTECT FINISHED PART BY BAGGING OR SIMILAR METHOD TO PROTECT AND MAINTAIN CLEANLINESS DURING SHIPMENT AND STORAGE. TAKE CARE NOT TO DING, SCRATCH, DENT, OR OTHERWISE MARK ANY ANY MACHINED SURFACE.

REQD	ITEM	PART NO.	DESCRIPTION
1	3	100004	CUSTOM MINI CFF, THRU HOLES, ROTATABLE,MDC OR EQL
1	2	110004	CUSTOM MINI CFF, THRU HOLES, NON-ROTATABLE, MDC OR EQL
1	1	103-55-6-EE	BELLOWS, 1.03 OD X .55 ID, STANDARD

REV	AUTHOR	APPROVER	DATE	CHANGE DESCRIPTION
A	wingert	wingert	04-07-05	INITIAL REVISION

UNLESS OTHERWISE SPECIFIED
TOLERANCES: .X± .06 .XX± .02 .XXX± .005; FRACTIONS: ± 1/64; ANGLES: ± 0.5°/INCH; MACH. SURFS.: 125✓ OR BETTER
REF: ASME Y14.5M-1994, THREADS ARE CLASS 2
BREAK EDGES .016 MAX. ON MACHINED WORK
REMOVE BURRS, WELD SPLATTER & LOOSE SCALE

PROJECT NAME: Advanced Light Source
UNIQUE NUMBER: AL-0013-1638
DO NOT SCALE PRINT
SCALE: 2:1
CATEGORY CODE: AL4045
THIRD ANGLE PROJECTION

ERNEST ORLANDO LAWRENCE BERKELEY NATIONAL LABORATORY
UNIVERSITY OF CALIFORNIA
ALS - INSERTION DEVICE BEAMLINES
BL 4.0.2 - MONOCHROMATOR
GRATING COOLING BELLOWS, SHORT
SHEET 1 OF 1 | SIZE: B | DWG NO: 26B713 | REV A

Officially Released to the LBNL Document Control Center
Released: April 7th, 2005 DCC Auth Key: 1FZIRR9VBG
Downloaded by: David W Plate at April 13, 2005 11:27:01
AUTO GENERATED PDF
Apr 07 2005 15:21:28 PDT