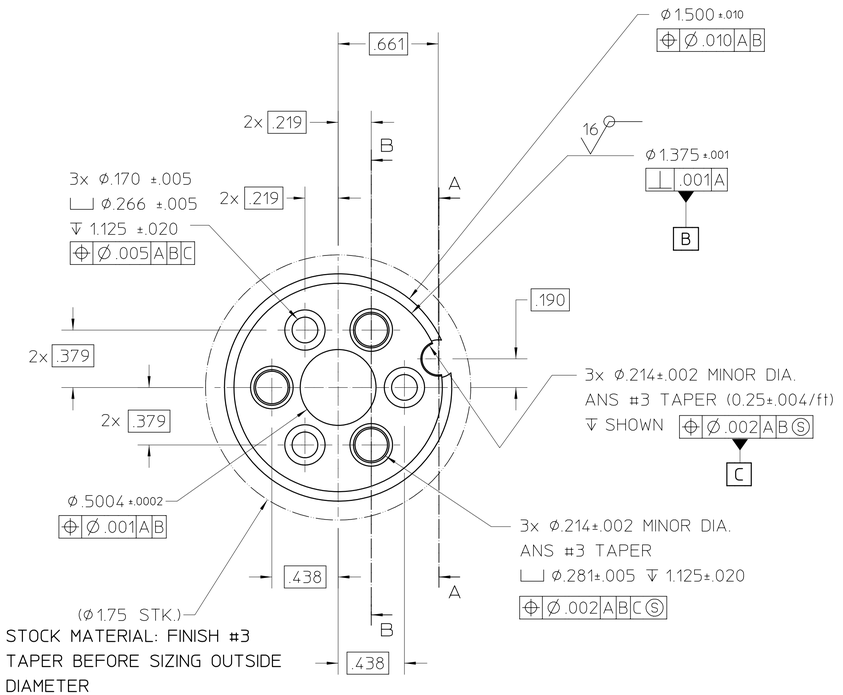

STOCK MATERIAL: FINISH #3 TAPER BEFORE SIZING OUTSIDE DIAMETER

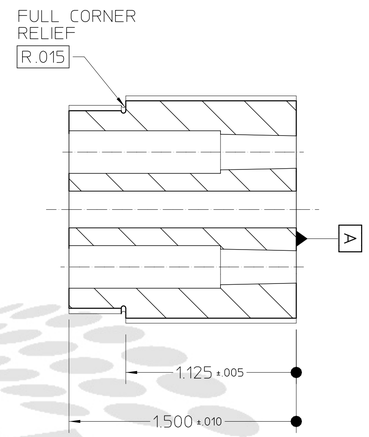

SECTION B-B
SCALE 1:1

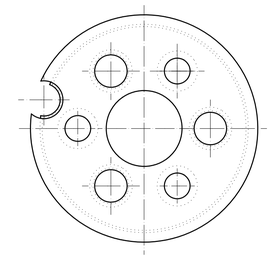

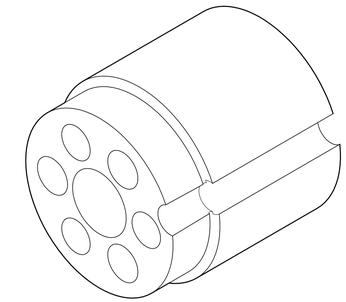

SCALE 2:1

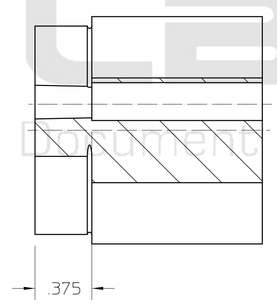

SECTION A-A
SCALE 1:1

ORDER OF OPERATION: MATCH-TAPER-REAM WITH GRATING SINE BAR DWG. # 26A858

FOR "GRATING CRADLE AND PIVOT STUB REAM ASSEMBLY" REFER TO DWG. 26B160

UNLESS OTHERWISE SPECIFIED.

1) DIMENSIONS AND TOLERANCING PER ASME Y14.5M-1994. ALL DIMENSIONS ARE IN INCHES. REFERENCE DIMENSIONS ARE SHOWN IN PARENTHESES. NOT ALL HIDDEN LINES ARE SHOWN.

2) THIS IS AN ULTRA HIGH VACUUM (UHV) PART AND REQUIRES SPECIAL ATTENTION TO AVOID UHV CONTAMINATION. READ LBNL SPECIFICATION M773 BEFORE PERFORMING ANY FABRICATION.

3) PROTECT FINISHED PART BY BAGGING OR SIMILAR METHOD TO PROTECT AND MAINTAIN CLEANLINESS DURING SHIPMENT AND STORAGE. TAKE EXTREME CARE NOT TO DING, SCRATCH, DENT, OR OTHERWISE MARK ANY MACHINED SURFACE.

REV	AUTHOR	APPROVER	DATE	CHANGE DESCRIPTION
C	wingert	wingert	04-07-05	ADD TABULATED DIMENSIONS
B	patton	patton	12-19-03	TAKE OFF TAPER REAM INFO
A	knolls	patton	12-11-03	INITIAL REVISION

UNLESS OTHERWISE SPECIFIED
TOLERANCES: .X± - .XX± -- .XXX± --- ; FRACTIONS: ± -/-- ; ANGLES: ± 0.5°/INCH ; MACH. SURFS.: 63 ✓ OR BETTER
REF: ASME Y14.5M-1994, THREADS ARE CLASS 2
BREAK EDGES .016 MAX. ON MACHINED WORK
REMOVE BURRS, WELD SPLATTER & LOOSE SCALE

MAT 2: . NOTES:
MAT 1: , STAINLESS STEEL 304 NOTES:

PROJECT NAME:
PROJECT NUMBER:

DO NOT SCALE PRINT — SCALE: 1 : 1 — CATEGORY CODE: AL4153
THIRD ANGLE PROJECTION

ERNEST ORLANDO LAWRENCE BERKELEY NATIONAL LABORATORY
UNIVERSITY OF CALIFORNIA
ALS - INSERTION DEVICE BEAMLINES
BL 11.0.1 MONOCHROMATOR
GRATING CRADLE PIVOT STUB
SHEET 1 OF 1 — SIZE: D — DWG NO: 26B009 — REV C

LBNL Document Control Center

Officially Released to the LBNL Document Control Center
Released: April 7th, 2005 DCC Auth Key: NL2O1SZJXC
Downloaded by: David W Plate at April 13, 2005 11:08:29

AUTO GENERATED PDF
Apr 07 2005 15:12:18 PDT