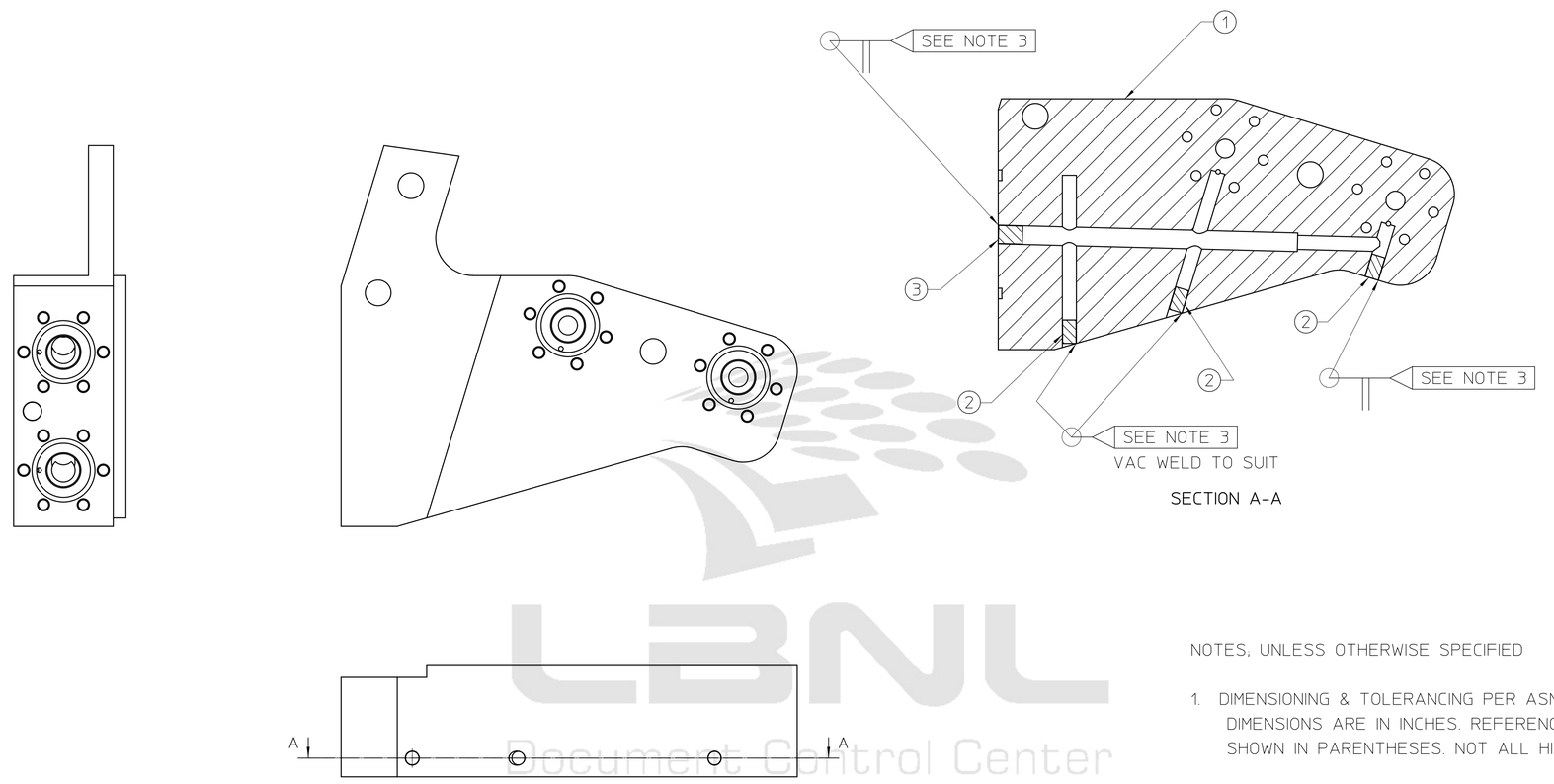

NOTES, UNLESS OTHERWISE SPECIFIED

1. DIMENSIONING & TOLERANCING PER ASME Y14.5M - 1994. ALL DIMENSIONS ARE IN INCHES. REFERENCE DIMENSIONS ARE SHOWN IN PARENTHESES. NOT ALL HIDDEN LINES ARE SHOWN.

2. SURFACE TREATMENT, THIS IS A UHV PART, CLEAN AND HANDLE PER LBL SPECIFICATION #M20013.

3. THE WELDS INDICATED ARE TO BE VACUUM TIGHT AND ARE TO BE HELIUM LEAK TESTED. THE LEAK RATE IS NOT TO EXCEED 2x 10e-9 cc/sec He.

REQD	ITEM	PART NO.	DESCRIPTION
1	3	26B156	MIRROR MANIFOLD WELD PLUG FOR Ø.250 HOLE
3	2	26B397	MIRROR MANIFOLD WELD PLUG FOR Ø.188 HOLE
1	1	26B210	MIRROR COOLING MANIFOLD BLOCK

REV	AUTHOR	APPROVER	DATE	CHANGE DESCRIPTION
A	patton	patton	06-30-20	INITIAL REVISION

UNLESS OTHERWISE SPECIFIED
TOLERANCES: X± .- .XX± -- .XXX± ---
FRACTIONS: ± -/--
ANGLES: ± 1°
MACH. SURFS.: 63 √ OR BETTER
REF: ASME Y14.5M-1994, THREADS ARE CLASS 2
BREAK EDGES .016 MAX. ON MACHINED WORK
REMOVE BURRS, WELD SPLATTER & LOOSE SCALE

PROJECT NAME:
PROJECT NUMBER:
DO NOT SCALE PRINT
SCALE: 1 : 1
CATEGORY CODE: AL 4165
THIRD ANGLE PROJECTION

ERNEST ORLANDO LAWRENCE
BERKELEY NATIONAL LABORATORY
UNIVERSITY OF CALIFORNIA

ALS - INSERTION DEVICE BEAMLINES
BL 6.0.1.2 BRANCHLINE
MIRROR COOLING MANIFOLD BLOCK WELDMENT

SHEET 1 OF 1 | SIZE: D | DWG NO: 26B398 | REV A

Officially Released to the LBNL Document Control Center
Released: June 30th, 2004 DCC Auth Key: IAJQV0MMII
Downloaded by: Sukhon Panomchan at July 29, 2004 11:42:19
AUTO GENERATED PDF
Jun 30 2004 14:53:03 PDT